GEN LED acolyte® Architectural Lighting Solutions

Date | Project

Notes

## ARMOR SERIES | NANO EXTERIOR LINEAR FIXTURES

The Nano Linear fixture is the perfect solution for projects that require high output and tight beam control in minimal space. With three premium optic lens options and three standard lengths, the sleek anodized Nano Linear features six brilliant dimmable CCTs (2700K-6000K) that can be tailored for any application. Use Nano Linear to highlight architectural details or navigate small ledges and locations where space is at a premium. Armor Series Nano Linear fixtures come with a three–year warranty.

### GEL-FLUSH™ TECHNOLOGY

The Armor Series Nano Linear fixture is manufactured with GelFlush™ Technology. This proprietary innovation uses a special Dow Corning sealant to protect your lighting from the elements. With Acolyte's Armor Series, there's no leaking and no condensation -- just clear, unobstructed beams of light!

IP 66 IK 08

## ORDERING GUIDE

| Category | CRI | Length | Color Temperature | | FWHM Beam Angle | Mounting Option |
|---|---|---|---|---|---|---|
| NANO | | | | | | |
| **NANO** - Armor Nano | **80** - 80+ CRI | **0.2** - 182 mm / 7.2 in. (3 W) | **27**- 2700K | **40** - 4000K | **25X35** - 25x35° | **SI** - Snap-In |
| | **90** - 90+ CRI | **0.5** - 500 mm / 19.7 in. (9 W) | **30** - 3000K | **50** - 5000K | **30** - 30x30° | **TS** - Tiltable Stand |
| | | **1.0** - 1000 mm / 39.4 in. (18 W) | **35** - 3500K | **60** - 6000K | **55** - 55x55° | |

### OPTIONAL ACCESSORIES:

**1.) Armor Series Mounting Arms:**
Small: ARMORMNT0609
Large: ARMORMNT1422

**2.) Symmetric Louver:**
NANOLOUV182 (182 mm)
NANOLOUV500 (500 mm)
NANOLOUV1000 (1000 mm)

**3.) 2 Pin Male to Female Jumper Cable:**
NANOJUMPMF1000 (1000 mm)
NANOJUMPMF2000 (2000 mm)

**4.) 2 Pin Female Cable to Bare Wire:**
NANOCBLFB300 (300 mm)
NANOCBLFB500 (500 mm)
NANOCBLFB1000 (1000 mm)
NANOCBLFB2000 (2000 mm)

### DRIVERS:

#### 0-10V/ELV/MLV 3-IN-1

**60W, 96W, 288W 0-10V/ELV/MLV 3-in-1 Dimmable Drivers**

Part No.:
- DRVW2460TRI010 (60 W)
- DRVW2496TRI010 (96 W)
- DRVW24288TRI010 (288 W)

#### DIMMABLE ELECTRONIC DRIVERS

**60W Dimmable Drivers**

Part No.:
- DRV2460ELV

#### NON-DIMMING ELECTRONIC DRIVERS

**60W, 96W Non-Dimming Compact Drivers**

Part No.:
- DRV2460C (60 W)
- DRV2496C (96 W)

#### ATHENA WIRELESS COMPATIBLE

**94W Athena Wireless Compatible Drivers**

Part No.:
- DRVW2494ATH1CH (1 channel)
- DRVW2494ATH2CH (2 channel)

#### CASAMBI COMPATIBLE DRIVERS

**100W & 200W Casambi Compatible 4 Channel Drivers**

Part No.:
- DRVW24100CAS4CH (100 W)
- DRVW24200CAS4CH (200 W)

#### DIMMABLE DALI-2 DRIVERS

**96W Dimmable DALI-2 DT6 D4I & DT8 D4I Drivers**

Part No.:
- DRVW2496DALI1CH (1 channel)
- DRVW2496DALI2CH (2 channel)

#### DIMMABLE DALI-2 DRIVERS

**75W, 150W, 240W DALI-2 Dimmable Drivers**

Part No.:
- DRVW2475DALI1CH (75 W, 1 channel)
- DRVW24150DALI1CH (150 W, 1 channel)
- DRVW24240DALI1CH (240 W, 1 channel)
- DRV24150DALI2CH (150 W, 2 channels)
- DRV24150DALI4CH (150 W, 4 channels)

## AVAILABLE COLOR TEMPERATURES



2700K 3000K 3500K 4000K 5000K 6000K

## AVAILABLE BEAM ANGLES

25x35° 30x30° 55x55°

## SPECIFICATIONS

| | | | | | | | | | |
|---|---|---|---|---|---|---|---|---|---|
| **Operating Voltage** | 24 VDC | | | | | | | | |
| **Length** | 7.2 in. / 182 mm | | | 19.7 in. / 500 mm | | | 39.4 in. / 1000 mm | | |
| **Power Consumption** | 3 W | | | 9 W | | | 18 W | | |
| **LEDs per Fixture** | 6 LEDs | | | 15 LEDs | | | 30 LEDs | | |
| **Amperage** | 0.125 A | | | 0.375 A | | | 0.75 A | | |
| **Color Temperature** | 2700K, 3000K, 3500k, 4000K, 5000K, 6000K | | | | | | | | |
| **LED Beam Angle** | 30x30° | 55x55° | 25x35° | 30x30° | 55x55° | 25x35° | 30x30° | 55x55° | 25x35° |
| **Lumen Output / Foot** | 355 | 359 | 352 | 355 | 359 | 352 | 355 | 359 | 352 |
| **Total Lumens** | 212 | 214 | 210 | 582.3 | 588.7 | 577.1 | 1164.6 | 1177.4 | 1154.2 |
| **Max. Run Length** | Up to 14 fixtures | | | Up to 6 fixtures | | | Up to 4 fixtures | | |
| **Weight** | 0.77 lb / 0.35kg | | | 1.65 lb / 0.75kg | | | 3.3 lb / 1.5kg | | |
| **CRI** | 80+ or 90+ | | | | | | | | |
| **LED Binning (SDCM)** | 3-step (80 CRI) or 2-step (90 CRI) | | | | | | | | |
| **Dimming Options** | 0-10 V, ELV/MLV, DALI | | | | | | | | |
| **Binning Tolerance** | +/-100K | | | | | | | | |
| **Ambient Temperature** | -40 — 122 °F (-40 — 50 °C) | | | | | | | | |
| **Housing / Lens** | Housing: Extruded Aluminium / Lens: Clear UV Protected PMMA<br>Cover: Tempered Glass<br>End Caps: Extruded Aluminium / Brackets: Extruded Aluminium<br>Housing, bracket, end cap material – 6063 high density aluminum alloy | | | | | | | | |
| **Connector** | 2 pin power connector | | | | | | | | |
| **Cable Length** | 11.81 in. / 300 mm | | | | | | | | |
| **Protection Rating** | IP66 | | | | | | | | |
| **Impact Rating** | IK08 | | | | | | | | |
| **Mounting Options** | Snap-In Clip, Tiltable Stand (140° adjustable), Mounting Arms (available in 2 different sizes) | | | | | | | | |
| **Lifetime (L70 repported)** | 50,000 hours | | | | | | | | |
| **Certifications** | CE, ETL / Luminaires – UL 1598, 3rd Ed., issued September 17, 2008, Rev. October 17, 2012 /<br>Luminaires – CSA C22.2 No.250.0-08, 3rd Ed., issued September 17, 2008, Rev. October 17, 2012 (R2013) | | | | | | | | |
| **Fixture Color Finish** | Anodized silver | | | | | | | | |

* ALL LUMEN DATA IS FROM 2700K 80 CRI FIXTURES

## DIMENSIONS

**7.2 in. / 182 mm:**

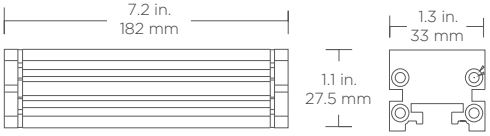


**19.7 in. / 500 mm:**

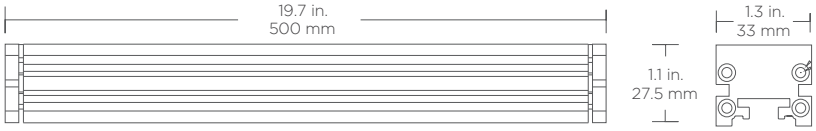


**39.4 in. / 1000 mm:**

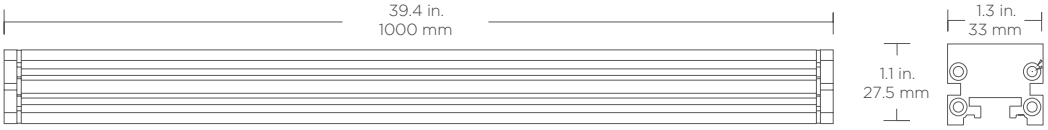


Acolyte does not warrant or represent that the information is free from errors or omission. The information may change without notice and Acolyte is not in any way liable for the accuracy of any information printed and stored or in any way interpreted or used.

## MOUNTING HARDWARE / ACCESSORIES

### MOUNTING HARDWARE

#### Snap-in Clip

For narrow installations where mounting clips need to be installed first

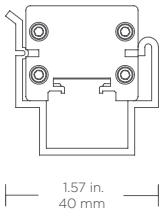


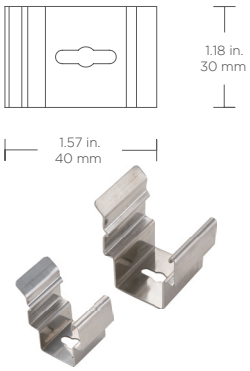


#### Tiltable Stand

For adjustable mounting angles

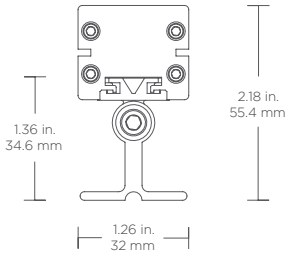


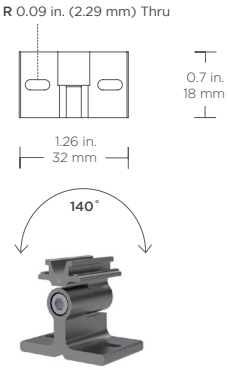


#### Mounting Arms

Small Mounting Arm Part Number: ARMORMNT0609
Large Mounting Arm Part Number: ARMORMNT1422

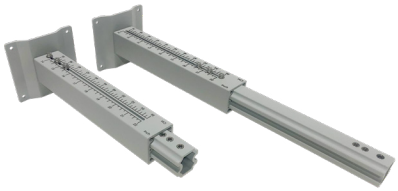

**Armor Series Mounting Arm**
Adjustable mounts (in 2 sizes) help set desired angle and distance from lighting surface

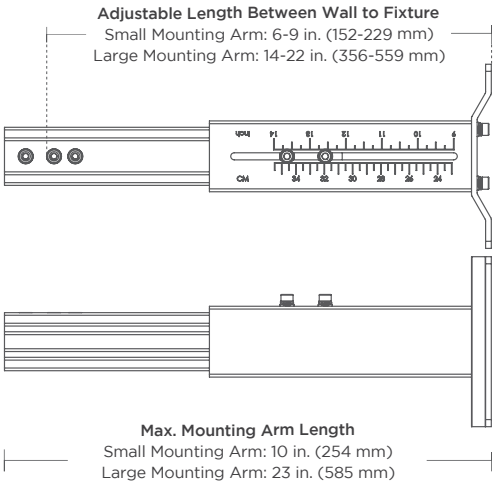


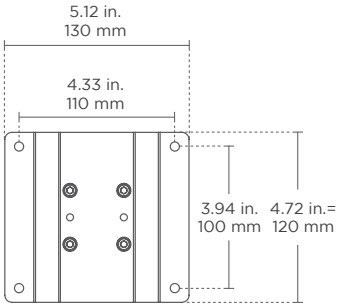


### ACCESSORIES

**Louver**
Part Number: NANOLOUV
For glare reduction
Note: This will affect beam angle

NANOLOUV182 (182 mm)
NANOLOUV500 (500 mm)
NANOLOUV1000 (1000 mm)

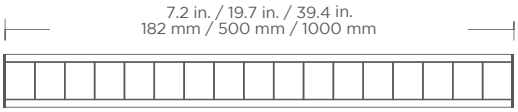


Not recommended for exterior applications

Side View

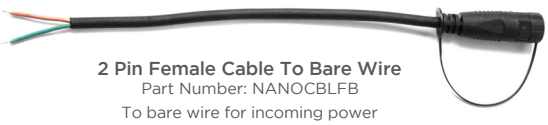

**2 Pin Female Cable To Bare Wire**
Part Number: NANOCBLFB
To bare wire for incoming power

NANOCBLFB300 (300 mm)
NANOCBLFB500 (500 mm)
NANOCBLFB1000 (1000 mm)
NANOCBLFB2000 (2000 mm)

**2 Pin Male To Female Jumper Cable**
Part Number: NANOJUMPMF
To connect 2 pin male connector to 2 pin female connector

NANOJUMPMF1000 (1000 mm)
NANOJUMPMF2000 (2000 mm)

### INCLUDED IN BOX

Fixture with 19.7 in. / 500mm input/output cables
+ 2 pin connectors

## CONNECTION

### NON-DIMMING FOR CASE 1:

CASE 1.

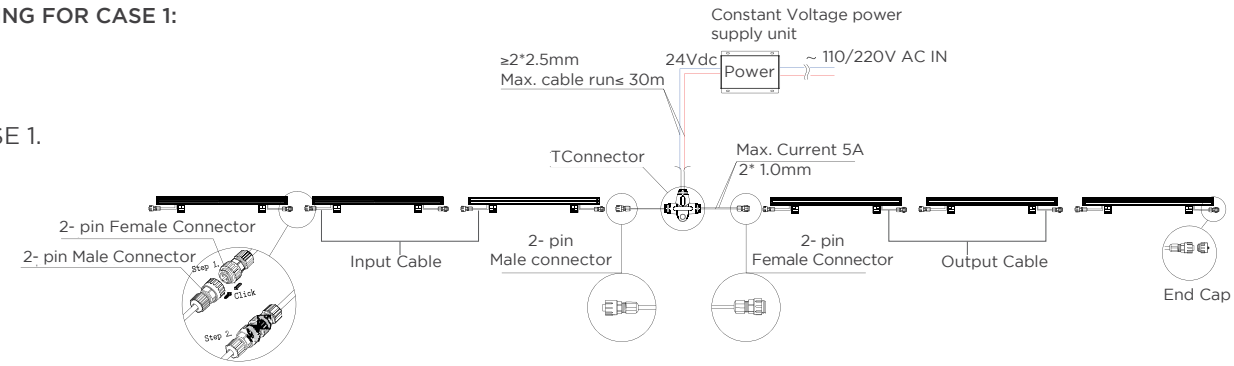


CASE 2.

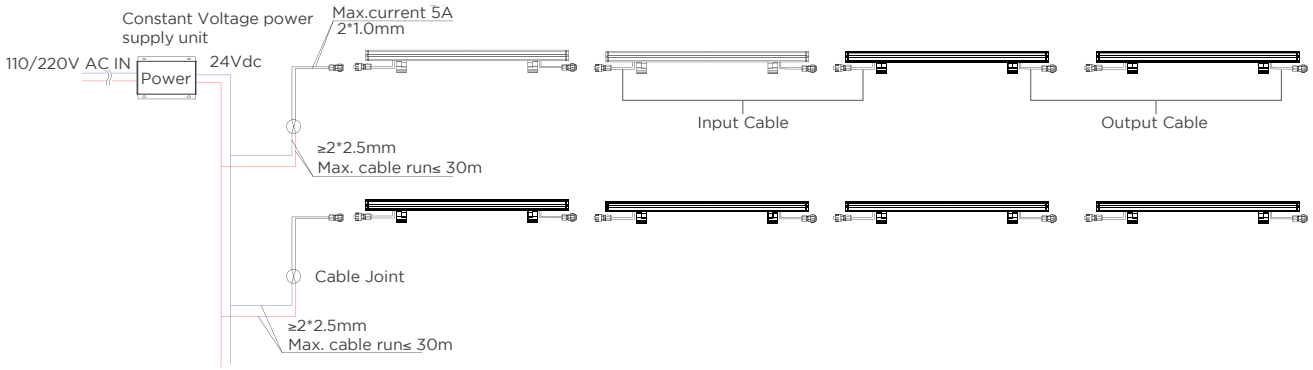


### 0-10V DIMMING:

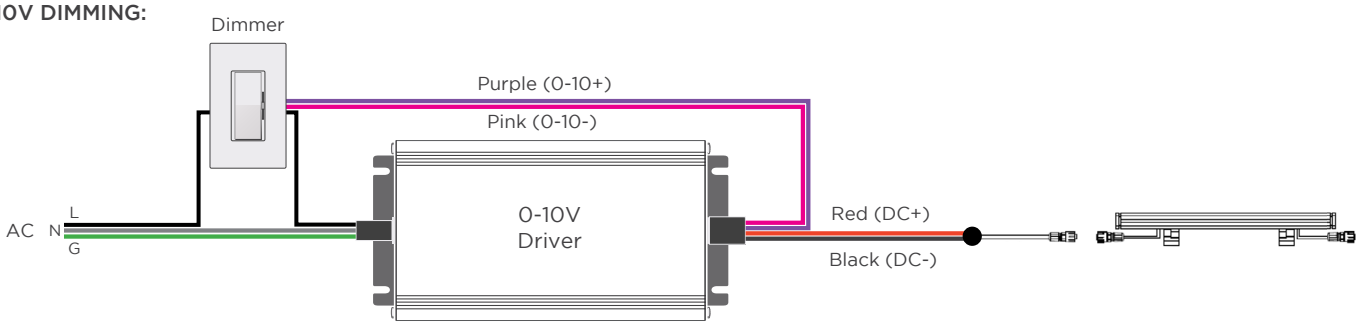


### ELV/MLV DIMMING:

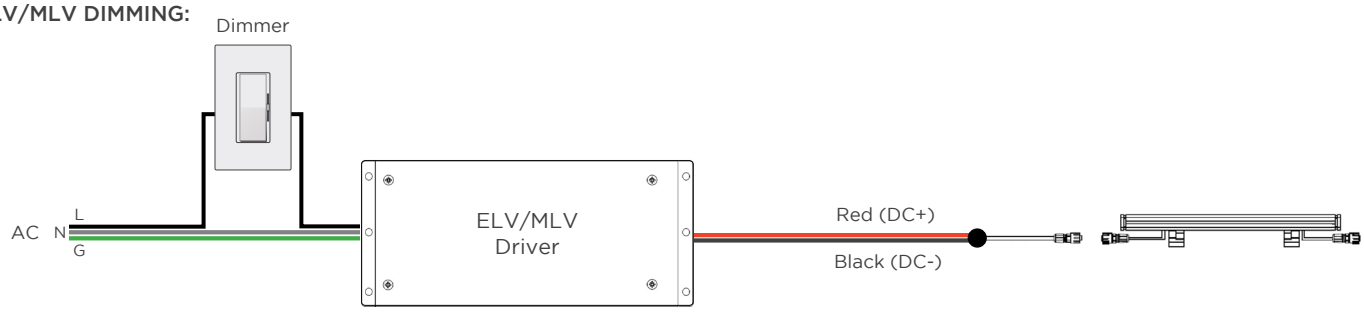

## CONNECTION

### DALI DIMMING:

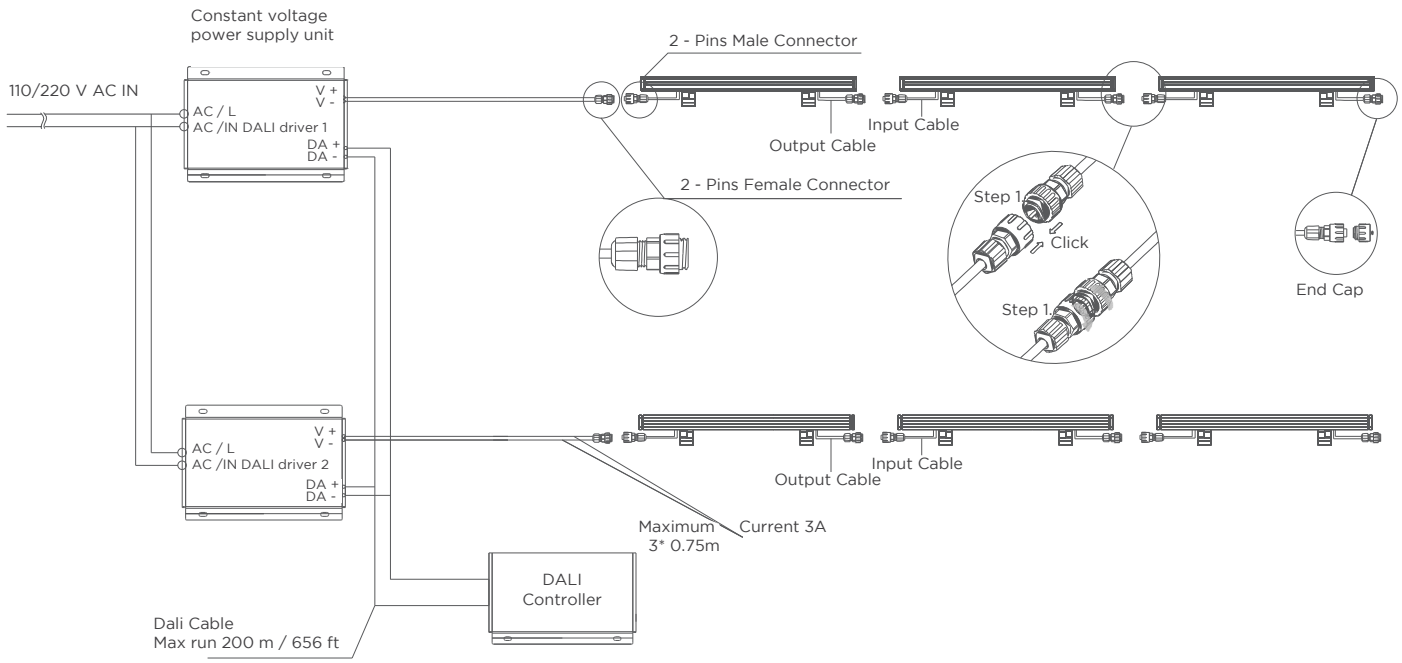


### CONNECTORS:

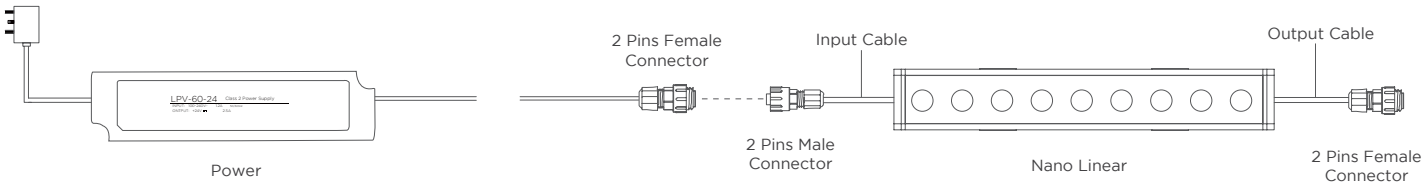


REV.19OCT2026

**GLOBAL HQ**
320 Murray Hill Pkwy
East Rutherford, NJ 07073
U.S.
T: (+1) 212 629 6830
E: Sales-US@GENLEDBrands.com

**EUROPEAN HQ**
Hogeweyselaan 119
1382 JK Weesp
Netherlands
T: (+31) 346 235 000
E: SalesEurope@GENLEDBrands.com

**MEINA HQ**
PO Box 371378, #823, Building 4EA
Dubai Airport Free Zone
Dubai, UAE
T: (+971) 4 701 7901
E: SalesMEINA@genledbrands.com

**ASIA-PACIFIC HQ**
Room 402, Building D
Shenshi Tongchuang Science and Technology Park
No. 16 Hongyin Road
Xingqiang Community, Xinhu Street
Guangming District, Shenzhen, China 518107
T: (+86) 755 8529 0710
E: Sales-Pacific@GENLEDBrands.com