GEN LED acolyte®
Architectural Lighting Solutions

Date | Project

Notes

AS7 CHANNEL FIXTURE

Our AS7 Channel Fixture is a surface mounted linear fixture designed to work with the new Micro RibbonLyte 1.0, 3.0 & 4.5. AS7's ultra slim width of 0.39 in. (10 mm) can create clean and modern linear designs for retail stores, commercial buildings and residential interiors.

- Available for field assembly or factory assembly
- Beam Angle 110°
- Wattage: 1.0 W/ft (3.3 W/m), 3.0 W/ft (9.84 W/m) or 4.5 W/ft (14.76 W/m)
- Delivered Lumen Range from 1 lm/ft (3 lm/m) to 500 lm/ft (1638 lm/m)
- Assembled in USA

HOUSING FINISHES

Silver Standard | **Black*** | **White*** | **Custom RAL***

*Additional fee applies

AVAILABLE LENS FINISHES

Milky Lens
63% Light Transmission

AVAILABLE COLORS & COLOR TEMPERATURES

1800K | 2000K | 2200K | 2400K | 2700K | 3000K | 3500K | 4000K | 6000K | Red | Amber | Green | Blue | Violet

DIMENSIONS

AS7 Channel

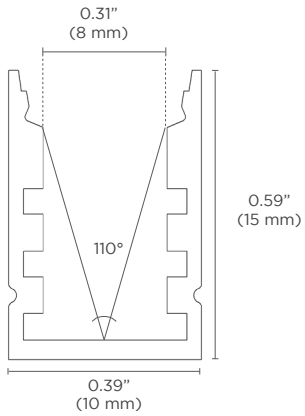

Width: 0.39 in. (10 mm)
Height: 0.59 in. (15 mm)
Internal Width: 0.31 in (8 mm)

Mounting Clip (Included Accessory)

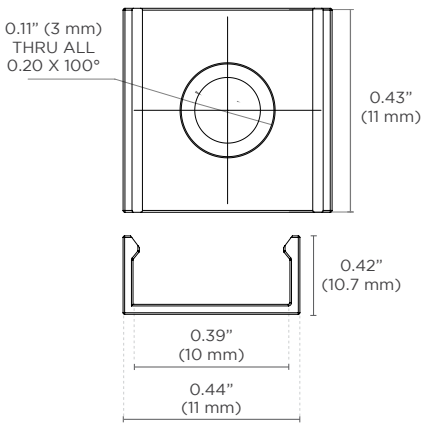

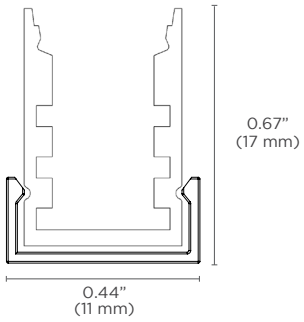

Width: 0.43 in. (11 mm)
Height: 0.42 in. (10.7 mm)
Length: 0.44 in (11 mm)

Note:
1. **Magnetic mounting** option available (see page 2)
2. **Exterior channel applications** should be securely attached to the mounting surface with appropriate screws and/or liquid nails. Acolyte strongly recommends field assembly for exterior applications. Use mounting clips for interior applications only.

Acolyte does not warrant or represent that the information is free from errors or omission. The information may change without notice and Acolyte is not in any way liable for the accuracy of any information printed and stored or in any way interpreted or used.

SPECIFICATIONS

Beam Angle	110°
Lens Type	Milky Lens
Length	Channel is sold by the foot and cut to your exact desired length. Required amount of mounting clips included.
Operating Voltage	24V
Dimming	MLV / 0-10 Volt / ELV / DALI / DMX
Operating Temperature	-40° F to 158° F (-40° C to 70° C)
Colors	1800K, 2000K, 2200K, 2400K, 2700K, 3000K, 3500K, 4000K, 6000K, Red, Amber, Green, Blue, Violet (1800K, 2000K, 2200K only available in IP20)
CRI	90+ CRI (Static white only)
Lamp Life	L70 at 50,000 Hours
MacAdam Ellipses (SDCM)	2-Step Binning (For Static White LEDs only)
Certifications	UL Listed UL 2108 Issued: 2004/02/27 Ed: 1 Rev: 2014/02/24 Low Voltage Lighting Systems CSA C22.2#9.0 Issued: 1996/06/01 Ed: 1 (R2011) General Requirements for Luminaries; with Gen. Inst. 1: 1997, Gen Inst. 2: 1998. ROHS compliant

ACCESSORIES

Magnetic Mount (Part #: CHMAG0.5)

Side View

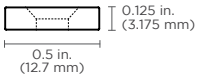

Top View

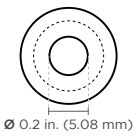

Assembled View

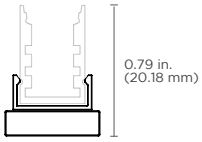

Features:
- High-energy neodymium magnets come attached to mounting clips with countersink hex nuts
- Create easy-mount magnetic channels with minimal surface gaps; no tools or drilling necessary
- Magnets rated for 8 lbs. of pull force with static load

Applications:
- Industrial lighting retrofits for troffers and other metal fixtures
- Metal retail shelf lighting
- Temporary light fixture installations

Acolyte does not warrant or represent that the information is free from errors or omission. The information may change without notice and Acolyte is not in any way liable for the accuracy of any information printed and stored or in any way interpreted or used.

ORDERING GUIDE

STEP 1 Complete Channel Part Number

CHANNEL	LENS	HOUSING COLOR	
CHAS7	M		
CHAS7 - AS7 Channel Fixture	**M** - Milky Lens	**SV** - Silver (default)	**WH** - White
		BK - Black	
		Consult factory for custom colors	

STEP 2 Complete RibbonLyte Part Number

CATEGORY	CRI	RIBBON TYPE & IP RATING	
RB			
RB - RibbonLyte	**0** - Static Color, Color Changing	**SWMC20** - Static White Micro IP20	**SCMC20** - Static Color Micro IP20
	90 - 90+ CRI Static White	**SWMC65** - Static White Micro IP65	**SCMC65** - Static Color Micro IP65

WATTAGE	COLOR	
1.0 - 1.0 W/ft (3.3 W/m - Static White, Static Color)	**18** - 1800K	**R** - Red
3.0 - 3.0 W/ft (9.8 W/m - Static White, Static Color)	**20** - 2000K	**A** - Amber
4.5 - 4.5 W/ft (14.8 W/m - Static White, Static Color)	**22** - 2200K	**G** - Green
	24 - 2400K	**B** - Blue
	27 - 2700K	**V** - Violet
	30 - 3000K	**Z** - Undecided**
	35 - 3500K	** For quotes only. Must be chosen before final order.
NOTE: To ensure waterproofing standards are met, IP65 RibbonLyte can NOT be cut in the field.	**40** - 4000K	
	60 - 6000K	

CONNECTION OPTIONS (See diagrams on the right)		Custom Length (ft.)
1 - Back Feed Bare Wire Connection	**3** - Soldered Daisy Chain	
2 - Back Feed with IP67 Male Coupler	**4** - Daisy Chain With IP67 Couplers	

1. (Default)

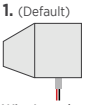

Wire Length:
Standard 12 in. / Custom up to 20 feet

2.

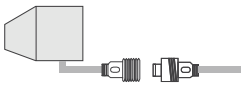

Wire Length:
Standard 12 in. / Custom up to 20 feet

3.

Wire Length:
Standard 3 in. / Custom up to 3 feet

4.

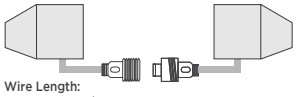

Wire Length:
Standard 3 in. / Custom up to 18 in.

STEP 3 Complete Assembly Option & Length

ASSEMBLY OPTION	LENGTH (Standard factory assembled length up to 6 ft 6.7 in. / 2 m)
FI - Field Assembly	
FA - Factory Assembly* (not recommended for exterior applications)	

*Factory assembled runs exceeding 6 ft 6.7 in. (2 m) will be split into multiple daisy chained fixtures.

DO NOT BUTT END CAPS AGAINST EACH OTHER WHEN CREATING LONGER FIXTURES

Acolyte STRONGLY SUGGESTS field assembly (without using interior end caps) for direct-view fixtures of more than 6 ft 6.7 in. (2 m) in length. Field assembly without interior end caps will eliminate gaps or dead spots that can be caused by butting interior end caps against each other.

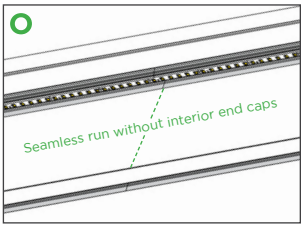

FIELD ASSEMBLY EXAMPLE

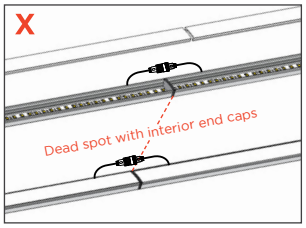

FACTORY ASSEMBLY EXAMPLE

STEP 4 Add Accessories

ACCESSORIES
CHMAG0.5 - Magnetic Mount

RIBBONLYTE SPECIFICATIONS & COMPATIBILITY

Available Wattages	Cuttable Length	LED Pitch	Color Temperature	lm/W without Lens	Delivered Lumens with Milky Lens	Max Length	Compatible with Channel	
							IP20	IP65
1.0 Static White Micro & 1.0 Static Color Micro	1.97 in. (50 mm)	43 LEDs/ft (140 LEDs/m)	2400K	79	49.8 lm/ft (163.3 lm/m)	28 ft (8.5 m)	✓	✓
			2700K	90	56.7 m/ft (186 lm/m)			
			3000K	94	59.2 lm/ft (194 lm/m)			
			3500K	98	61.7 lm/ft (202.5 lm/m)			
			4000K	97	61.1 lm/ft (200.5 lm/m)			
			6000K	93	58.6 lm/ft (192.2 lm/m)			
			Red	27	16.8 lm/ft (55.0 lm/m)			
			Green	78	49.2 lm/ft (161.3 lm/m)			
			Blue	17	10.6 lm/ft (34.9 lm/m)			
			Amber	19	11.8 lm/ft (38.8 lm/m)			
			Violet	1	0.3 lm/ft (1.0 lm/m)			
3.0 Static White Micro & 3.0 Static Color Micro	1.97 in. (50 mm)	43 LEDs/ft (140 LEDs/m)	2400K	79	149.3 lm/ft (489.7 lm/m)	28 ft (8.5 m)	✓	✓
			2700K	90	170.1 lm/ft (557.9 lm/m)			
			3000K	94	177.7 lm/ft (582.7 lm/m)			
			3500K	98	185.2 lm/ft (607.5 lm/m)			
			4000K	97	183.3 lm/ft (601.3 lm/m)			
			6000K	93	175.8 lm/ft (576.5 lm/m)			
			Red	27	50.3 lm/ft (164.9 lm/m)			
			Green	78	147.5 lm/ft (483.9 lm/m)			
			Blue	17	31.9 lm/ft (104.6 lm/m)			
			Amber	19	35.5 lm/ft (116.4 lm/m)			
			Violet	1	0.9 lm/ft (2.9529lm/m)			
4.5 Static White Micro & 4.5 Static Color Micro	1.97 in. (50 mm)	43 LEDs/ft (140 LEDs/m)	2400K	80	223.5 lm/ft (733.2 lm/m)	28 ft (8.5 m)	✓	✓
			2700K	88	247.8 lm/ft (812.7 lm/m)			
			3000K	93	259.8 lm/ft (852.2 lm/m)			
			3500K	87	244.7 lm/ft (802.6 lm/m)			
			4000K	97	268.2 lm/ft (879.7 lm/m)			
			6000K	94	263.1 lm/ft (862.9 lm/m)			
			Red	26	73.5 lm/ft (241.1 lm/m)			
			Green	83	243.8 lm/ft (799.9 lm/m)			
			Blue	17	52.8 lm/ft (173.2 lm/m)			
			Amber	17	51.7 lm/ft (169.6 lm/m)			
			Violet	1	1.4 lm/ft (4.5 lm/m)			

DIODE VISIBILITY CHART (Data below applies to installations with Milky lens only)

No Visible Diode = N

With Visible Diode = Y

Static White & Static Color Micro RibbonLyte

1.0	3.0	4.5
IP20 IP65	IP20 IP65	IP20 IP65
N	**N**	**N**

AVAILABLE DRIVERS / CONTROLLERS AND DIMMING OPTIONS / WIRE GAUGE CHART

NON-DIMMING ELECTRONIC DRIVERS

30W, 60W, 96W
Non-Dimming Electronic
Class 2 Drivers

Part No.:
- DRVW2430 (30 Watt)
- DRVW2460 (60 Watt)
- DRVW2496 (96 Watt)

Output Voltage: 24 V
Voltage Range: 120-277 VAC
IP Rating: Dry or Damp
UL Listed

240W, 320W
Non-Dimming
Electronic Drivers

Part No.:
- DRVW24240 (240 Watt)
- DRVW24320 (320 Watt)

Output Voltage: 24 V
Voltage Range: 90-305 VAC
IP Rating: Dry or Damp
UL Recognized

ELV & MLV DRIVERS

60W, 96W, 150W, 300W
ELV/MLV Dimmable Drivers

Part No.:
- DRVW2460ELVMLV (60 Watt)
- DRVW2496ELVMLV (96 Watt)
- DRVW24150ELVMLV (150 Watt)
- DRVW24300ELVMLV (300 Watt)

Line Voltage Dimmable Drivers
Output Voltage: 24 V
Voltage Range: 100-277 VAC
IP Rating: IP67
Dimmable
UL, CE, and CSA Listed

0-10V DRIVERS AND DIMMERS

0-10V Dimmable Waterproof Drivers

96W Part No.: DRVW249610P
288W Part No.: DRVW2428810P
Output Voltage: 24 V (+/- 0.5V)
Voltage Range: 100-277 VAC
Environmental Rating: UL Wet Location
UL Listed

DRIVER AND RIBBONLYTE AT FULL LOAD

Wattages	30		60		96		150		200		240		300		320	
Wire Gauge	Feet	Meters	Feet	Meters	Feet	Meters	Feet	Meters	Feet	Meters	Feet	Meters	Feet	Meters	Feet	Meters
24 AWG / 0.25 mm²	14	4.27	9	2.74	5.5	1.68	3.75	1.14	2.75	0.84	2.25	0.69	1.75	0.53	1.75	0.53
22 AWG / 0.34 mm²	22	6.71	14	4.27	9	2.74	5.75	1.75	4.5	1.37	3.5	1.07	2.75	0.84	2.75	0.84
20 AWG / 0.5 mm²	35	10.67	23	7.01	14	4.27	9	2.74	7	2.13	5.75	1.75	4.5	1.37	4.25	1.30
18 AWG / 0.75 mm²	56	17.07	37	11.28	23	7.01	15	4.57	11	3.35	9	2.74	7.5	2.29	7	2.13
16 AWG / 1.5 mm²	90	27.44	60	18.29	37	11.28	24	7.32	18	5.49	15	4.57	12	3.66	11	3.35
14 AWG / 2.5 mm²	142	43.29	95	28.96	59	17.99	38	11.59	28	8.54	23	7.01	19	5.79	17	5.18
12 AWG / 4 mm²	226	68.90	151	46.04	94	28.66	60	18.29	45	13.72	37	11.28	30	9.15	28	8.54
10 AWG / 6 mm²	360	109.76	240	73.17	150	45.73	96	29.27	72	21.95	60	18.29	48	14.63	45	13.72
8 AWG / 10 mm²	574	175.00	381	116.16	239	72.87	153	46.65	115	35.06	95	28.96	76	23.17	71	21.65

WIRING DIAGRAM

0-10V

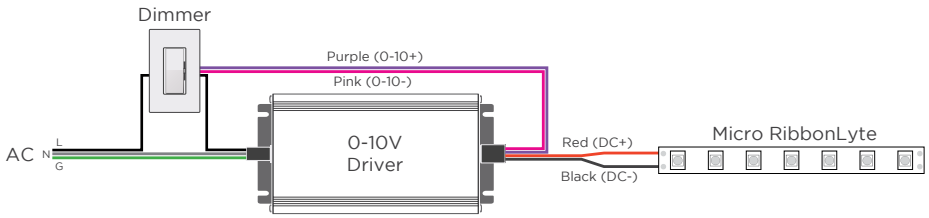

MLV / ELV

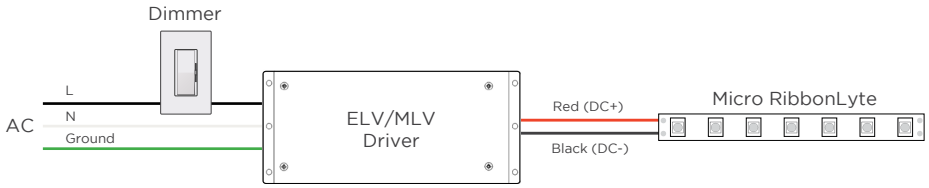

DMX

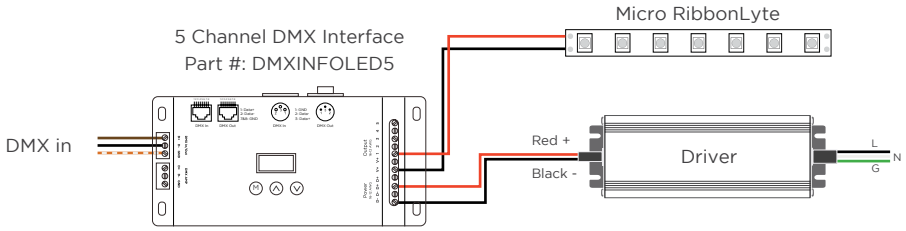

WIRE COLORS PER RIBBONLYTE COLOR

STATIC WHITE + STATIC COLOR MICRO

Red Wire (+) Positive

Black Wire (-) Negative