GEN LED acolyte® Architectural Lighting Solutions

Date | Project

Notes

C22 CHANNEL FIXTURE

C22 Channel Fixture is a wide, low profile channel with a 119-degree beam angle. We offer a variety of mounting options as well as a choice of clear, frosted and milky lenses to create a full range of light output and design. Custom design a fixture for nearly any application with our C22 Channel Fixture and RibbonLyte products.

- Available for field assembly or factory assembly
- Beam Angle 119°
- Wattage Range from 0.75 W/ft (2.46 W/m) to 8.8 W/ft (28.9 W/m)
- Static White delivered lumen range from 44.1 lm/ft (144.6 lm/m) up to 729.4 lm/ft (2371.5 lm/m)
- Assembled in USA
- Suitable for use in closets with RibbonLyte (6.0 W/ft and less)

HOUSING FINISHES

Silver Standard | **Black*** | **White*** | **Custom RAL***

*Additional fee applies

AVAILABLE LENS FINISHES

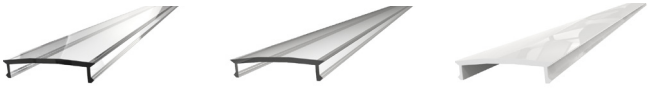

Clear Lens
92% Light Transmission

Frosted Lens
85% Light Transmission

Milky Lens
70% Light Transmission

AVAILABLE COLORS & COLOR TEMPERATURES

1800K | 2000K | 2200K | 2400K | 2700K | 3000K | 3500K | 4000K | 6000K | Red | Amber | Green | Blue | RGBA | RGBW | VW | WD

DIMENSIONS

C22 Channel

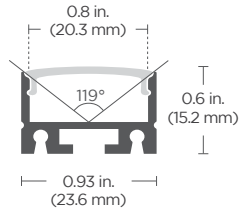

Width: 0.93 in. (23.6 mm)
Height: 0.6 in. (15.2 mm)
Internal Width: 0.8 in. (20.3 mm)

Mounting Clip (Included Accessory)

Side View

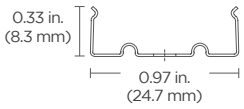

Top View

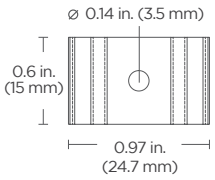

Assembled View

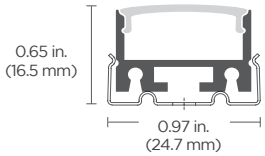

Width: 0.6 in. (15 mm)
Length: 0.97 in. (24.7 mm)
Height: 0.33 in. (8.3 mm)

Note:
1. Each section of channel includes 3 mounting clips.
2. Magnetic mounting option available (see page 2)

Acolyte does not warrant or represent that the information is free from errors or omission. The information may change without notice and Acolyte is not in any way liable for the accuracy of any information printed and stored or in any way interpreted or used.

SPECIFICATIONS

Beam Angle	119°
Lens Type	Clear Lens, Frosted Lens, Milky Lens
Length	Channel is sold by the foot and cut to your exact desired length. Required amount of mounting clips included.
Operating Voltage	24V
Dimming	MLV / 0-10 Volt / Lutron Hi-Lume 1% dimming LED drivers / Lutron VIVE code compliance available / ELV / DALI / DMX
Operating Temperature	-40° F to 158° F (-40° C to 70° C)
Colors	1800K, 2000K, 2200K, 2400K, 2700K, 3000K, 3500K, 4000K, 6000K, Red, Amber, Green, Blue, RGBW, RGBA, VW, Warm Dim, RGBW Addressable (1800K, 2000K, 2200K only available in IP20)
CRI	90+ CRI (Static white only)
Lamp Life	L70 at 50,000 Hours
MacAdam Ellipses (SDCM)	2-Step Binning (For Static White LEDs only)
Certifications	ETL Listed: UL 2108 Issued: 2004/02/27 Ed: 1 Rev: 2014/02/24 Low Voltage Lighting Systems CSA C22.2#9.0 Issued: 1996/06/01 Ed: 1 (R2011) General Requirements for Luminaries; with Gen. Inst. 1: 1997, Gen Inst. 2: 1998. ROHS compliant UL 2108 - Low Voltage Lighting Systems UL 8750 - Light Emitting Diode (LED) Equipment for Use in Lighting Products UL 1598 / CSA 250.0-08 - Luminaires Suitable for use in closets, compliant with NFPA® 70, NEC® Section 410.16 (A)(3) and 410.16 (C)(5).

ACCESSORIES

Tiltable Stand (Part # TILTSTANDST)

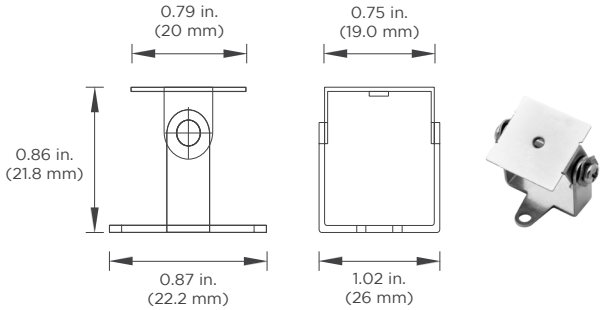

Assembled Height with Channel: 1.51 in. (38.4 mm)

Magnetic Mount (Part #: CHMAG0.5)

Side View

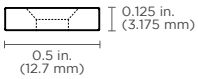

Top View

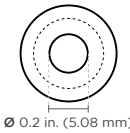

Assembled View

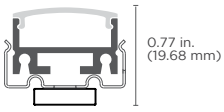

Features:
- High-energy neodymium magnets come attached to mounting clips with countersink hex nuts
- Create easy-mount magnetic channels with minimal surface gaps; no tools or drilling necessary
- Magnets rated for 8 lbs. of pull force with static load

Applications:
- Industrial lighting retrofits for troffers and other metal fixtures
- Metal retail shelf lighting
- Temporary light fixture installations

Acolyte does not warrant or represent that the information is free from errors or omission. The information may change without notice and Acolyte is not in any way liable for the accuracy of any information printed and stored or in any way interpreted or used.

ORDERING GUIDE

STEP 1 Complete Channel Part Number

CHANNEL	LENS		HOUSING COLOR	
CHC22				
CHC22 - C22 Channel	**C** - Clear Lens*	**M** - Milky Lens	**SV** - Silver (default)	**WH** - White
	F - Frosted Lens	* Clear lens is the default option if not specified.	**BK** - Black	
			Consult factory for custom colors	

STEP 2 Complete RibbonLyte Part Number

CATEGORY	CRI	RIBBON TYPE & IP RATING		
RB				
RB - RibbonLyte	**0** - Static Color, Color Changing	**SWS220** - Static White Series 2 IP20	**RGBWS220** - RGBW Series 2 IP20	**VWS220** - VW Series 2 IP20
	90 - 90+ CRI Static White	**SWS265** - Static White Series 2 IP65	**RGBWS265** - RGBW Series 2 IP65	**VWS265** - VW Series 2 IP65
		SWS268 - Static White Series 2 IP68	**RGBWS268** - RGBW Series 2 IP68	**VWS268** - VW Series 2 IP68
		SCS220 - Static Color Series 2 IP20	**RGBWA20** - RGBW/A IP20	**WD20** - Warm Dim IP20
		SCS265 - Static Color Series 2 IP65	**RGBWA65** - RGBW/A IP65	**WD65** - Warm Dim IP65
		SCS268 - Static Color Series 2 IP68	**RGBWA68** - RGBW/A IP68	**WD68** - Warm Dim IP68
		RGBWADD - Addressable RGBW IP67		

WATTAGE	COLOR	
0.75 - 0.75 W/ft (2.46 W/m - Static White, Static Color)	**18** - 1800K	**VW** - Variable White
1.0 - 1.0 W/ft (3.3 W/m - Variable White)	**20** - 2000K	**RGB27** - Red, Green, Blue + 2700K
1.5 - 1.5 W/ft (4.9 W/m - Static White, Static Color)	**22** - 2200K	**RGB30** - Red, Green, Blue + 3000K
2.2 - 2.2 W/ft (7.2 W/m - Static White, Static Color)	**24** - 2400K	**RGB40** - Red, Green, Blue + 4000K
3.0 - 3.0 W/ft (9.8 W/m - Static White, Static Color, Variable White)	**27** - 2700K	**RGB60** - Red, Green, Blue + 6000K
4.4 - 4.4 W/ft (14.4 W/m - Static White, Static Color, RGBW, RGBA)	**30** - 3000K	**RGBA** - Red, Green, Blue + Amber
5.0 - 5.0 W/ft (16.4 W/m - Static White, Static Color)	**35** - 3500K	**RGBW30** - RGB + 3000K Addressable
5.2 - 5.2 W/ft (17.1 W/m - Warm Dim)	**40** - 4000K	**RGBW40** - RGB + 4000K Addressable
5.5 - 5.5 W/ft (18.0 W/m - RGBW, RGBA)	**60** - 6000K	**RGBW60** - RGB + 6000K Addressable
6.0 - 6.0 W/ft (19.7 W/m - Static White, Static Color, Variable White, RGBW Addressable)	**R** - Red	**2920** - Warm Dim 2900K - 2000K (IP20)
8.8 - 8.8 W/ft (28.9 W/m - RGBW)	**A** - Amber	**2721** - Warm Dim 2700K - 2100K (IP65+IP68)
	G - Green	**Z** - Undecided**
	B - Blue	** For quotes only. Must be chosen before final order.

CONNECTION OPTIONS (See diagrams on the right)		Custom Length (ft.)
1 - End Feed Bare Wire Connection	**4** - End Feed with IP67 Male Coupler	
2 - Back Feed Bare Wire Connection	**5** - Soldered Daisy Chain	
3 - Side Feed Bare Wire Connection	**6** - Daisy Chain With IP67 Couplers	

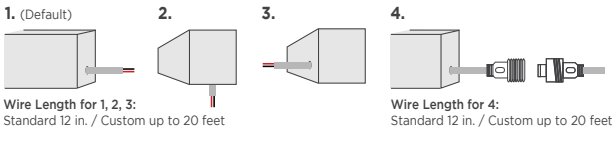

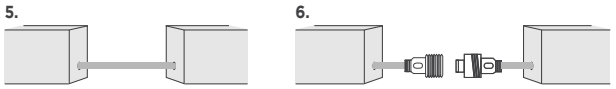

STEP 3 Complete Assembly Option & Length

ASSEMBLY OPTION	LENGTH (Standard factory assembled length up to 78 in. / 2 m)
FI - Field Assembly	
FA - Factory Assembly	

STEP 4 Add Accessories

ACCESSORIES	
TILTSTANDST - Tiltable Stand	**CHMAG0.5** - Magnetic Mount

RIBBONLYTE SPECIFICATIONS & COMPATIBILITY

Available Wattages	Cuttable Length	LED Pitch	Color Temp.	lm/W without Lens	Delivered Lumens with Clear Lens	Delivered Lumens with Frosted Lens	Delivered Lumens with Milky Lens	Max Length	Compatible with Channel		
									IP20	IP65	IP68
0.75 Static White Series 2	1.97 in. (50 mm)	48 LEDs/ft (160 LEDs/m)	1800K	84	58 lm/ft (190.3 lm/m)	53.6 lm/ft (175.8 lm/m)	44.1 lm/ft (144.6 lm/m)	IP20: 49 ft (15 m) IP65/ IP68: 32.8 ft (10 m)	✓	✓	✓
			2000K	99	68.3 lm/ft (224 lm/m)	63.1 lm/ft (207 lm/m)	52 lm/ft (170.6 lm/m)				
			2200K	109	75.2 lm/ft (246.7 lm/m)	69.5 lm/ft (228 lm/m)	57.2 lm/ft (187.6 lm/m)				
			2400K	113	78 lm/ft (255.8 lm/m)	72.0 lm/ft (236.2 lm/m)	59.3 lm/ft (194.5 lm/m)				
			2700K	123	84.9 lm/ft (278.5 lm/m)	78.4 lm/ft (257.2 lm/m)	64.6 lm/ft (211.9 lm/m)				
			3000K	123	84.9 lm/ft (278.5 lm/m)	78.4 lm/ft (257.2 lm/m)	64.6 lm/ft (211.9 lm/m)				
			3500K	130	89.7 lm/ft (294.2 lm/m)	82.9 lm/ft (272 lm/m)	68.3 lm/ft (224 lm/m)				
			4000K	134	92.5 lm/ft (303.4 lm/m)	85.4 lm/ft (280.1 lm/m)	70.4 lm/ft (230.9 lm/m)				
			6000K	131	90.4 lm/ft (296.5 lm/m)	83.5 lm/ft (273.9 lm/m)	68.8 lm/ft (225.7 lm/m)				
1.5 Static White Series 2	1.97 in. (50 mm)	48 LEDs/ft (160 LEDs/m)	1800K	84	115.9 lm/ft (380.2 lm/m)	107.1 lm/ft (351.3 lm/m)	88.2 lm/ft (289.3 lm/m)	IP20: 49 ft (15 m) IP65/ IP68: 32.8 ft (10 m)	✓	✓	✓
			2000K	98	135.2 lm/ft (443.5 lm/m)	125 lm/ft (410 lm/m)	102.9 lm/ft (337.5 lm/m)				
			2200K	109	150.4 lm/ft (493.3 lm/m)	139 lm/ft (455.9 lm/m)	114.5 lm/ft (375.6 lm/m)				
			2400K	113	155.9 lm/ft (511.4 lm/m)	144.1 lm/ft (472.6 lm/m)	118.7 lm/ft (389.3 lm/m)				
			2700K	123	169.7 lm/ft (556.6 lm/m)	156.8 lm/ft (514.3 lm/m)	129.2 lm/ft (423.8 lm/m)				
			3000K	123	169.7 lm/ft (556.6 lm/m)	156.8 lm/ft (514.3 lm/m)	129.2 lm/ft (423.8 lm/m)				
			3500K	129	178 lm/ft (583.8 lm/m)	164.5 lm/ft (539.6 lm/m)	135.5 lm/ft (444.4 lm/m)				
			4000K	134	184.9 lm/ft (606.5 lm/m)	170.9 lm/ft (560.6 lm/m)	140.7 lm/ft (461.5 lm/m)				
			6000K	131	180.8 lm/ft (593 lm/m)	167 lm/ft (547.8 lm/m)	137.6 lm/ft (451.3 lm/m)				
2.2 Static White Series 2	1.97 in. (50 mm)	48 LEDs/ft (160 LEDs/m)	1800K	83	168 lm/ft (551 lm/m)	155.2 lm/ft (509.1 lm/m)	127.8 lm/ft (419.2 lm/m)	IP20: 49 ft (15 m) IP65/ IP68: 32.8 ft (10 m)	✓	✓	✓
			2000K	96	194.3 lm/ft (637.3 lm/m)	179.5 lm/ft (588.8 lm/m)	147.8 lm/ft (484.8 lm/m)				
			2200K	106	214.5 lm/ft (703.6 lm/m)	198.2 lm/ft (650.1 lm/m)	163.2 lm/ft (535.3 lm/m)				
			2400K	111	224.7 lm/ft (737 lm/m)	207.6 lm/ft (680.9 lm/m)	170.9 lm/ft (560.6 lm/m)				
			2700K	120	242.9 lm/ft (796.7 lm/m)	224.4 lm/ft (736 lm/m)	184.8 lm/ft (606.1 lm/m)				
			3000K	122	246.9 lm/ft (809.8 lm/m)	228.1 lm/ft (748.2 lm/m)	187.9 lm/ft (616.3 lm/m)				
			3500K	127	257 lm/ft (843 lm/m)	237.5 lm/ft (779 lm/m)	195.6 lm/ft (641.6 lm/m)				
			4000K	133	269.2 lm/ft (883 lm/m)	248.7 lm/ft (779 lm/m)	204.8 lm/ft (671.7 lm/m)				
			6000K	128	259.1 lm/ft (849.8 lm/m)	239.4 lm/ft (785.2 lm/m)	197.1 lm/ft (646.5 lm/m)				
3.0 Static White Series 2	1.97 in. (50 mm)	48 LEDs/ft (160 LEDs/m)	2400K	109.8	303.1 lm/ft (994.1 lm/m)	280.1 lm/ft (918.6 lm/m)	230.6 lm/ft (756.5 lm/m)	IP20: 49 ft (15 m) IP65/ IP68: 32.8 ft (10 m)	✓	✓	✓
			2700K	122.9	339.6 lm/ft (1114 lm/m)	313.5 lm/ft (1028.1 lm/m)	258.1 lm/ft (846.7 lm/m)				
			3000K	130	359.1 lm/ft (1177.9 lm/m)	331.4 lm/ft (1087.1 lm/m)	273 lm/ft (895.3 lm/m)				
			3500K	133	367.5 lm/ft (1205.3 lm/m)	339.2 lm/ft (1112.4 lm/m)	279.3 lm/ft (916.1 lm/m)				
			4000K	133	367.5 lm/ft (1205.3 lm/m)	339.2 lm/ft (1112.4 lm/m)	279.3 lm/ft (916.1 lm/m)				
			6000K	127	350.8 lm/ft (1150.5 lm/m)	323.7 lm/ft (1061.8 lm/m)	266.6 lm/ft (874.5 lm/m)				
4.4 Static White Series 2	1.97 in. (50 mm)	48 LEDs/ft (160 LEDs/m)	2400K	109	441.2 lm/ft (1447 lm/m)	407.7 lm/ft (1337.1 lm/m)	335.7 lm/ft (1101.2 lm/m)	28 ft 4 in. (8.64 m)	✓	✓	✓
			2700K	122	494.4 lm/ft (1621.6 lm/m)	456.3 lm/ft (1496.6 lm/m)	375.8 lm/ft (1232.5 lm/m)				
			3000K	129	522.8 lm/ft (1714.7 lm/m)	482.5 lm/ft (1582.5 lm/m)	397.3 lm/ft (1303.2 lm/m)				
			3500K	132	534.9 lm/ft (1754.5 lm/m)	493.7 lm/ft (1619.3 lm/m)	406.6 lm/ft (1333.5 lm/m)				
			4000K	132	534.9 lm/ft (1754.5 lm/m)	493.7 lm/ft (1619.3 lm/m)	406.6 lm/ft (1333.5 lm/m)				
			6000K	126	510.6 lm/ft (1674.8 lm/m)	471.2 lm/ft (1545.7 lm/m)	388.1 lm/ft (1272.9 lm/m)				
5.0 Static White Series 2	1.4 in. (35.7 mm)	68 LEDs/ft (224 LEDs/m)	2400K	109.8	505.1 lm/ft (1656.8 lm/m)	466.8 lm/ft (1531 lm/m)	384.4 lm/ft (1260.8 lm/m)	IP20: 49 ft (15 m) IP65/ IP68: 32.8 ft (10 m)	✓	✓	✓
			2700K	122.9	566.1 lm/ft (1856.7 lm/m)	522.4 lm/ft (1713.6 lm/m)	430.2 lm/ft (1411.2 lm/m)				
			3000K	130	598.5 lm/ft (1963.2 lm/m)	552.4 lm/ft (1811.9 lm/m)	454.9 lm/ft (1492.1 lm/m)				
			3500K	133	612.5 lm/ft (2008.9 lm/m)	565.3 lm/ft (1854 lm/m)	465.5 lm/ft (1526.8 lm/m)				
			4000K	133	612.5 lm/ft (2008.9 lm/m)	565.3 lm/ft (1854 lm/m)	465.5 lm/ft (1526.8 lm/m)				
			6000K	127	584.6 lm/ft (1917.6 lm/m)	539.6 lm/ft (1769.7 lm/m)	444.3 lm/ft (1457.4 lm/m)				

RIBBONLYTE SPECIFICATIONS & COMPATIBILITY

Available Wattages	Cuttable Length	LED Pitch	Color Temp.	lm/W without Lens	Delivered Lumens with Clear Lens	Delivered Lumens with Frosted Lens	Delivered Lumens with Milky Lens	Max Length	Compatible with Channel		
									IP20	IP65	IP68
6.0 Static White Series 2	1.4 in. (35.7 mm)	68 LEDs/ft (224 LEDs/m)	2400K	109	601.6 lm/ft (1973.2 lm/m)	555.9 lm/ft (1823.4 lm/m)	457.8 lm/ft (1501.6 lm/m)	28 ft (8.5 m)	✓	✓	✓
			2700K	122	674.2 lm/ft (2211.3 lm/m)	622.2 lm/ft (2040.8 lm/m)	512.4 lm/ft (1680.7 lm/m)				
			3000K	129	712.9 lm/ft (2338.2 lm/m)	657.9 lm/ft (2157.9 lm/m)	541.8 lm/ft (1777.1 lm/m)				
			3500K	132	729.4 lm/ft (2392.5 lm/m)	673.2 lm/ft (2208.1 lm/m)	554.4 lm/ft (1818.4 lm/m)				
			4000K	132	612.5 lm/ft (2008.9 lm/m)	673.2 lm/ft (2208.1 lm/m)	554.4 lm/ft (1818.4 lm/m)				
			6000K	126	696.3 lm/ft (2283.8 lm/m)	642.6 lm/ft (2107.7 lm/m)	529.2 lm/ft (1735.8 lm/m)				
0.75 Static Color Series 2	1.97 in. (50 mm)	48 LEDs/ft (160 LEDs/m)	Red	41	28 lm/ft (93 lm/m)	26 lm/ft (86 lm/m)	22 lm/ft (70.6 lm/m)	IP20: 49 ft (15 m) IP65/ IP68: 32.8 ft (10 m)	✓	✓	✓
			Green	175	121 lm/ft (396 lm/m)	112 lm/ft (366 lm/m)	92 lm/ft (301.4 lm/m)				
			Blue	19	13 lm/ft (43 lm/m)	12 lm/ft (40 lm/m)	10 lm/ft (32.7 lm/m)				
			Amber	34	23 lm/ft (77 lm/m)	22 lm/ft (71 lm/m)	18 lm/ft (58.6 lm/m)				
1.5 Static Color Series 2	1.97 in. (50 mm)	48 LEDs/ft (160 LEDs/m)	Red	42	58 lm/ft (190 lm/m)	54 lm/ft (176 lm/m)	44 lm/ft (144.7 lm/m)	IP20: 49 ft (15 m) IP65/ IP68: 32.8 ft (10 m)	✓	✓	✓
			Green	160	221 lm/ft (724 lm/m)	204 lm/ft (669 lm/m)	168 lm/ft (551.1 lm/m)				
			Blue	18	25 lm/ft (81 lm/m)	23 lm/ft (75 lm/m)	19 lm/ft (62 lm/m)				
			Amber	34	47 lm/ft (154 lm/m)	43 lm/ft (142 lm/m)	36 lm/ft (117.1 lm/m)				
2.2 Static Color Series 2	1.97 in. (50 mm)	48 LEDs/ft (160 LEDs/m)	Red	42	85 lm/ft (279 lm/m)	79 lm/ft (258 lm/m)	65 lm/ft (212.2 lm/m)	IP20: 49 ft (15 m) IP65/ IP68: 32.8 ft (10 m)	✓	✓	✓
			Green	145	293 lm/ft (963 lm/m)	271 lm/ft (889 lm/m)	223 lm/ft (732.4 lm/m)				
			Blue	18	36 lm/ft (119 lm/m)	34 lm/ft (110 lm/m)	28 lm/ft (90.9 lm/m)				
			Amber	33	67 lm/ft (219 lm/m)	62 lm/ft (202 lm/m)	51 lm/ft (166.7 lm/m)				
3.0 Static Color Series 2	1.97 in. (50 mm)	48 LEDs/ft (160 LEDs/m)	Red	40.0	110.4 lm/ft (362.1 lm/m)	102.0 lm/ft (334.6 lm/m)	84.0 lm/ft (275.52 lm/m)	32.8 ft (10 m)	✓	✓	✓
			Green	127.0	350.9 lm/ft (1151.0 lm/m)	323.9 lm/ft (1062.2 lm/m)	266.7 lm/ft (874.776 lm/m)				
			Blue	25.0	69.1 lm/ft (226.6 lm/m)	63.8 lm/ft (209.1 lm/m)	52.5 lm/ft (172.2 lm/m)				
			Amber	29.0	80.1 lm/ft (262.8 lm/m)	74.0 lm/ft (242.6 lm/m)	60.9 lm/ft (199.752 lm/m)				
4.4 Static Color Series 2	1.97 in. (50 mm)	48 LEDs/ft (160 LEDs/m)	Red	38.0	153.8 lm/ft (504.5 lm/m)	142.1 lm/ft (466.2 lm/m)	117.0 lm/ft (383.8912 lm/m)	29 ft (8.8 m)	✓	✓	✓
			Green	117.0	474.1 lm/ft (1555.1 lm/m)	437.6 lm/ft (1435.3 lm/m)	360.4 lm/ft (1181.981 lm/m)				
			Blue	24.0	97.3 lm/ft (319.0 lm/m)	89.8 lm/ft (294.4 lm/m)	73.9 lm/ft (242.4576 lm/m)				
			Amber	25.0	101.3 lm/ft (332.2 lm/m)	93.5 lm/ft (306.7 lm/m)	77.0 lm/ft (252.56 lm/m)				
5.0 Static Color Series 2	1.4 in. (35.7 mm)	68 LEDs/ft (224 LEDs/m)	Red	37.0	170.2 lm/ft (558.2 lm/m)	157.3 lm/ft (515.8 lm/m)	129.5 lm/ft (424.76 lm/m)	30 ft (9.14 m)	✓	✓	✓
			Green	116.0	534.2 lm/ft (1752.1 lm/m)	493.0 lm/ft (1617.0 lm/m)	406.0 lm/ft (1331.68 lm/m)				
			Blue	24.0	110.5 lm/ft (362.5 lm/m)	102.0 lm/ft (334.6 lm/m)	84.0 lm/ft (275.52 lm/m)				
			Amber	26.0	119.7 lm/ft (392.7 lm/m)	110.5 lm/ft (362.4 lm/m)	91.0 lm/ft (298.48 lm/m)				
6.0 Static Color Series 2	1.4 in. (35.7 mm)	68 LEDs/ft (224 LEDs/m)	Red	37.0	204.2 lm/ft (669.8 lm/m)	188.7 lm/ft (618.9 lm/m)	155.4 lm/ft (509.712 lm/m)	28 ft (8.5 m)	✓	✓	✓
			Green	113.0	624.4 lm/ft (2048.2 lm/m)	576.3 lm/ft (1890.3 lm/m)	474.6 lm/ft (1556.688 lm/m)				
			Blue	23.0	127.1 lm/ft (416.9 lm/m)	117.3 lm/ft (384.8 lm/m)	96.6 lm/ft (316.9 lm/m)				
			Amber	24.0	132.6 lm/ft (435.0 lm/m)	122.4 lm/ft (401.6 lm/m)	100.8 lm/ft (330.7 lm/m)				
1.0 Variable White Series 2	1.97 in. (50 mm)	42 LEDs/ft (140 LEDs/m)	2000K + 6500K	85.0	78.2 lm/ft (257 lm/m)	72.3 lm/ft (237 lm/m)	60 lm/ft (200 lm/m)	32.8 ft (10 m)	✓	✓	✓
3.0 Variable White Series 2	1.97 in. (50 mm)	42 LEDs/ft (140 LEDs/m)	2000K + 6500K	80.0	220.8 lm/ft (725 lm/m)	205.0 lm/ft (670 lm/m)	168.0 lm/ft (551.2 lm/m)	32.8 ft (10 m)	✓	✓	✓
6.0 Variable White Series 2	1.97 in. (50 mm)	42 LEDs/ft (140 LEDs/m)	2000K + 6500K	75.0	415 lm/ft (1,362 lm/m)	382.5 lm/ft (1255 lm/m)	315.0 lm/ft (1033.5 lm/m)	32.8 ft (10 m)	✓	✓	✓

RIBBONLYTE SPECIFICATIONS & COMPATIBILITY

Available Wattages	Cuttable Length	LED Pitch	Color Temp.	lm/W without Lens	Delivered Lumens with Clear Lens	Delivered Lumens with Frosted Lens	Delivered Lumens with Milky Lens	Max Length	Compatible with Channel		
									IP20	IP65	IP68
4.4 RGBW Series 2	1.97 in. (50 mm)	36 LEDs/ft (120 LEDs/m)	RGBW	45	188.1 lm/ft (617.2 lm/m) All LEDs at 100%	168.3 lm/ft (552.2 lm/m) All LEDs at 100%	148.5 lm/ft (487.2 lm/m) All LEDs at 100%	19 ft 8 in. (6 m)	✓	N/A	N/A
5.5 RGBW Series 2	1.97 in. (50 mm)	36 LEDs/ft (120 LEDs/m)	RGBW	59	308.8 lm/ft (1013.0 lm/m) All LEDs at 100%	275.8 lm/ft (904.9 lm/m) All LEDs at 100%	243.3 lm/ft (798.5 lm/m) All LEDs at 100%	19 ft 7.9 in. (6 m)	N/A	✓	✓
8.8 RGBW Series 2	1.97 in. (50 mm)	36 LEDs/ft (120 LEDs/m)	RGBW	61	510.2 lm/ft (1673.8 lm/m) All LEDs at 100%	456.3 lm/ft (1497.1 lm/m) All LEDs at 100%	402.6 lm/ft (1320.9 lm/m) All LEDs at 100%	16 ft 4 in. (5 m)	✓	N/A	N/A
4.4 RGBW	6.55 in. (166.4 mm)	18 LEDs/ft (60 LEDs/m)	RGBW	65	263.1 lm/ft (863 lm/m) All LEDs at 100%	243.95 lm/ft (799.85 lm/m) All LEDs at 100%	200.9 lm/ft (658.7 lm/m) All LEDs at 100%	19 ft 7.9 in. (6 m)	✓	✓	✓
4.4 RGBA	6.55 in. (166.4 mm)	18 LEDs/ft (60 LEDs/m)	RGBA	33	133.6 lm/ft (438.1 lm/m) All LEDs at 100%	243.95 lm/ft (799.85 lm/m) All LEDs at 100%	200.9 lm/ft (658.7 lm/m) All LEDs at 100%	19 ft 7.9 in. (6 m)	✓	✓	✓
5.5 4-in-1 RGBW	3.94 in. (100 mm)	18 LEDs/ft (60 LEDs/m)	RGBW	51	305 lm/ft (1000.3 lm/m) All LEDs at 100%	237.15 lm/ft (777.75 lm/m) All LEDs at 100%	195.3 lm/ft (640.5 lm/m) All LEDs at 100%	19 ft 7.9 in. (6 m)	✓	✓	✓
5.5 4-in-1 RGBA	3.94 in. (100 mm)	18 LEDs/ft (60 LEDs/m)	RGBA	27	161.5 lm/ft (529.6 lm/m) All LEDs at 100%	237.15 lm/ft (777.75 lm/m) All LEDs at 100%	195.3 lm/ft (640.5 lm/m) All LEDs at 100%	19 ft 7.9 in. (6 m)	✓	✓	✓
8.8 RGBW	3.94 in. (100 mm)	36 LEDs/ft (120 LEDs/m)	RGBW	43	344.08 lm/ft (1127.92 lm/m) All LEDs at 100%	317.9 lm/ft (1042.1 lm/m) All LEDs at 100%	261.8 lm/ft (858.2 lm/m) All LEDs at 100%	19 ft 7.9 in. (6 m)	✓	✓	
8.8 RGBA	3.94 in. (100 mm)	36 LEDs/ft (120 LEDs/m)	RGBA	22	344.08 lm/ft (1127.92 lm/m) All LEDs at 100%	317.9 lm/ft (1042.1 lm/m) All LEDs at 100%	261.8 lm/ft (858.2 lm/m) All LEDs at 100%	19 ft 7.9 in. (6 m)	✓	✓	
RGBW Addressable	3.94 in. (100 mm)	18 LEDs/ft (60 LEDs/m)	Red	33.5	30.8 lm/ft (101.2 lm/m)	28.5 lm/ft (93.5 lm/m)	23.5 lm/ft (77 lm/m)	16 ft 5.64 in. (5.02 m)	N/A	N/A	✓ IP67
			Green	82	75.4 lm/ft (247.5 lm/m)	69.7 lm/ft (228.7 lm/m)	57.4 lm/ft (188.3 lm/m)				
			Blue	15.5	14.2 lm/ft (46.7 lm/m)	13.2 lm/ft (43.2 lm/m)	10.8 lm/ft (35.6 lm/m)				
			White	103	94.8 lm/ft (310.9 lm/m)	87.6 lm/ft (287.3 lm/m)	72.1 lm/ft (236.6 lm/m)				
			All	40	222.8 lm/ft (730.8 lm/m)	205.8 lm/ft (675.2 lm/m)	169.5 lm/ft (556.1 lm/m)				
5.2 Warm Dim	3.94 in. (100 mm)	36 LEDs/ft (120 LEDs/m)	WARM DIM	55	263.1 lm/ft (863 lm/m)	244.8 lm/ft (803.25 lm/m)	201.6 lm/ft (661.5 lm/m)	12 in. (30.5 cm)	✓	✓	✓

DIODE VISIBILITY CHART (Data below applies to installations with Milky lens only)

No Visible Diode = N

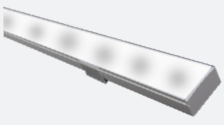

With Visible Diode = Y

Static White & Static Color RibbonLyte				Color Changing RibbonLyte							
0.75/1.5/2.2	3.0/4.4		5.0/6.0	4.4 RGBW Series 2	5.5 RGBW Series 2	8.8 RGBW Series 2	4.4 RGBW/A	5.5 4-in-1 RGBW/A	8.8 RGBW/A	Warm Dim	Variable White
IP20 IP65 IP68	IP20 IP65	IP68	IP20 IP65 IP68	IP20	IP65 IP68	IP20	IP20 IP65 IP68	IP20 IP65 IP68	IP20 IP65	IP20 IP65 IP68	IP20 IP65 IP68
Y	N	Y	Y	Y	Y	Y	Y	Y	Y	Y	Y

AVAILABLE DRIVERS

NON-DIMMING ELECTRONIC DRIVERS

30W, 60W, 96W
Non-Dimming Electronic
Class 2 Drivers

Part No.:
• DRVW2430 (30 Watt)
• DRVW2460 (60 Watt)
• DRVW2496 (96 Watt)

Output Voltage: 24 V
Voltage Range: 120-277 VAC
IP Rating: Dry or Damp
UL Listed

240W, 320W
Non-Dimming
Electronic Drivers

Part No.:
• DRVW24240 (240 Watt)
• DRVW24320 (320 Watt)

Output Voltage: 24 V
Voltage Range: 90-305 VAC
IP Rating: Dry or Damp
UL Recognized

LUTRON HI-LUME DRIVERS

40W
Lutron Hi-Lume 1% Dimming
Class 2 Drivers

Part No.:
• DRVLUT24403W (40 Watt, 3-wire)
• DRVLUT24402W (40 Watt, 2-wire)

Output Voltage: 24 V
Voltage Range: 120-277 VAC (3-wire model)
or 120V (2-wire model)
IP Rating: Dry or Damp
Dimmable using 2-wire forward phase,
3-wire+G or digital EcoSystem
UL Listed

ELV & MLV DRIVERS WITH COMPATIBLE DIMMERS

60W, 96W, 150W, 300W
ELV/MLV Dimmable Drivers

Part No.:
• DRVW2460ELVMLV (60 Watt)
• DRVW2496ELVMLV (96 Watt)
• DRVW24150ELVMLV (150 Watt)
• DRVW24300ELVMLV (300 Watt)

Line Voltage Dimmable Drivers
Output Voltage: 24 V
Voltage Range: 100-277 VAC
IP Rating: IP67
Dimmable
UL, CE, and CSA Listed

LUTRON Skylark Contour Dimmer

Part No.: TRIDIMSKY
Width: 2.94 in (75 mm)
Length: 4.69 in (120 mm)
Depth: 0.30 in (7.6 mm)

• Single pole and 3-way versions
• Compatible with Acolyte MLV drivers
• Slide adjusts brightness and On/Off control
• 30 mA max control current
• Available in white finish

LUTRON NOVA-T Dimmer

Part No.: TRIDIMNOVA
Width: 2.75 in (70 mm)
Length: 4.56 in (116 mm)
Depth: 0.30 in (7.6 mm)

• Slide adjusts brightness and On/Off control
• 30 mA max control current
• Available in white finish

LUTRON DIVA Dimmer

Part No.: TRIDIMDIVA
(With Locator Light) TRIDIMDIVAL
Width: 2.94 in (75 mm)
Length: 4.69 in (120 mm)
Depth: 0.30 in (7.6 mm)

• Large paddle switch with a captive linear-slide dimmer
• 30 mA max control current
• Available in white finish
• Available with locator light which glows green when the switch is off

Note: For more options, please reference the Optional Dimmer List on Acolyte product website page.

AVAILABLE DRIVERS / CONTROLLERS AND DIMMING OPTIONS / WIRE GAUGE CHART

0-10V DRIVERS AND DIMMERS

0-10V Dimmable Waterproof Drivers

96W Part No.: DRVW249610P
288W Part No.: DRVW2428810P
Output Voltage: 24 V (+/- 0.5V)
Voltage Range: 100-277 VAC
Environmental Rating: UL Wet Location
UL Listed

LUTRON DIVA Dimmer

Part No.: LVDIMDIVA
Width: 2.94 in (75 mm)
Length: 4.69 in (120 mm)
Depth: 0.30 in (7.6 mm)

- Compatible with 0-10 V Dimming Module
- Large paddle switch with a captive linear-slide dimmer
- 30 mA max control current
- Available in white finish

LUTRON NOVA-T Dimmer

Part No.: LVDIMNOVA
Width: 2.75 in (70 mm)
Length: 4.56 in (116 mm)
Depth: 0.30 in (7.6 mm)

- Compatible with 0-10 V Dimming Module
- Slide adjusts brightness and On/Off control
- 30 mA max control current
- Available in white finish

DIMMING MODULE

Variable White Dimming Module

Part No.: VWDIMMOD
- 1 dimming module required per 30 ft (9.1 m)
- This product is only compatible with Variable White RibbonLyte, not Variable White Amber or Variable White Red. Works with any 0-10V dimmers to provide CCT change with one dimmer and brightness change with the other.

Note: Max length before additional power is introduced

DMX CONTROLLER AND PART NUMBER - FOR COLOR CHANGING VERSIONS

GLASS TOUCH WALL CONTROLLERS
Part Number: AWCRGBWW
AWCVWW

1 ZONE WALL CONTROLLER
Part Number: DMXCTRLG

5 ZONE WALL CONTROLLER
Part Number: DMXCTRL

10 ZONE WALL CONTROLLER
Part Number: DMXCTRLD

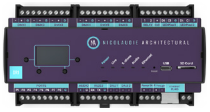

2 UNIVERSE DMX CONTROLLER
Part Number: DMXCTRLDR2U

6 UNIVERSE DMX CONTROLLER
Part Number: DMXCTRLDR6U

4 CHANNEL WATERPROOF DMX INTERFACE
Part Number: DMXINFWLCD4

5 CHANNEL DMX INTERFACE
Part Number: DMXINFLCD5

DMX OPTO SPLITTER
Part Number: DMXOS8

DRIVER AND RIBBONLYTE AT FULL LOAD

Wattages	30		60		96		150		200		240		300		320	
Wire Gauge	Feet	Meters	Feet	Meters	Feet	Meters	Feet	Meters	Feet	Meters	Feet	Meters	Feet	Meters	Feet	Meters
24 AWG	14	4.27	9	2.74	5.5	1.68	3.75	1.14	2.75	0.84	2.25	0.69	1.75	0.53	1.75	0.53
22 AWG	22	6.71	14	4.27	9	2.74	5.75	1.75	4.5	1.37	3.5	1.07	2.75	0.84	2.75	0.84
20 AWG	35	10.67	23	7.01	14	4.27	9	2.74	7	2.13	5.75	1.75	4.5	1.37	4.25	1.30
18 AWG	56	17.07	37	11.28	23	7.01	15	4.57	11	3.35	9	2.74	7.5	2.29	7	2.13
16 AWG	90	27.44	60	18.29	37	11.28	24	7.32	18	5.49	15	4.57	12	3.66	11	3.35
14 AWG	142	43.29	95	28.96	59	17.99	38	11.59	28	8.54	23	7.01	19	5.79	17	5.18
12 AWG	226	68.90	151	46.04	94	28.66	60	18.29	45	13.72	37	11.28	30	9.15	28	8.54
10 AWG	360	109.76	240	73.17	150	45.73	96	29.27	72	21.95	60	18.29	48	14.63	45	13.72
8 AWG	574	175.00	381	116.16	239	72.87	153	46.65	115	35.06	95	28.96	76	23.17	71	21.65

WIRING DIAGRAMS

0-10V

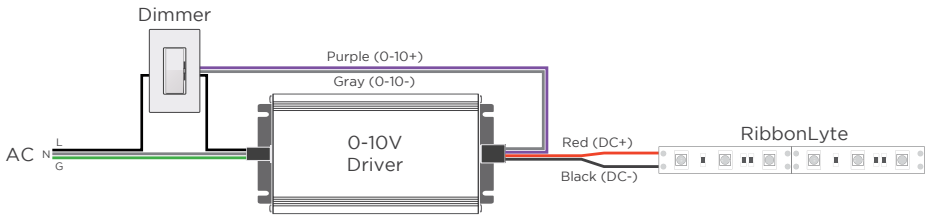

MLV / ELV

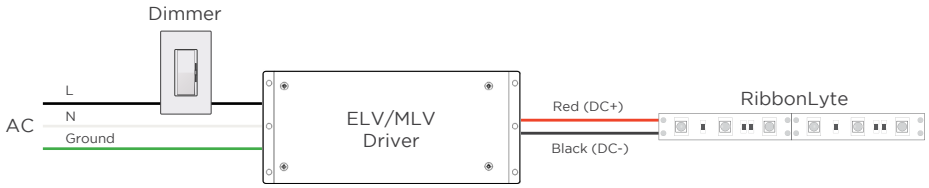

DMX

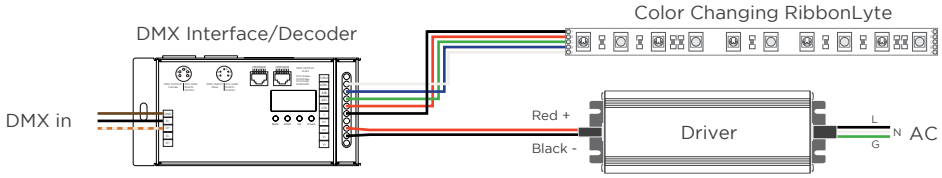

WARM DIM

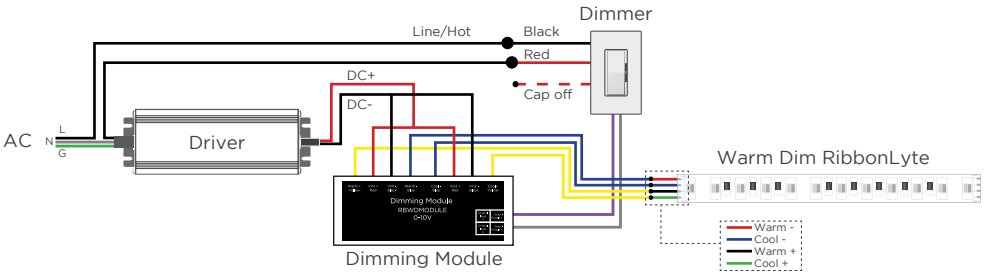

2-CHANNEL VARIABLE WHITE DIMMING

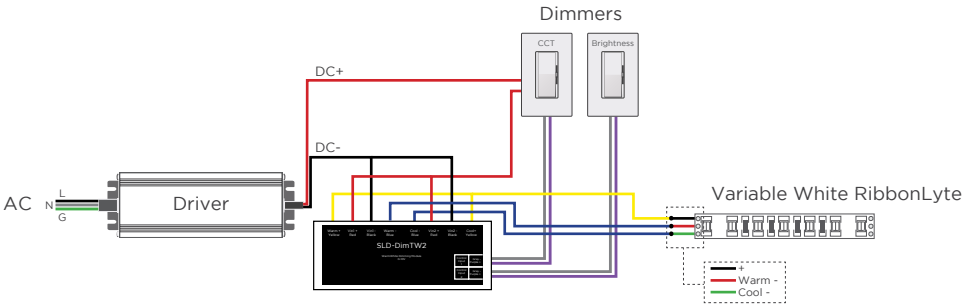

DMX WIRING DIAGRAM - COMPATIBLE WITH ALL MODELS OF VARIABLE WHITE RIBBONLYTE

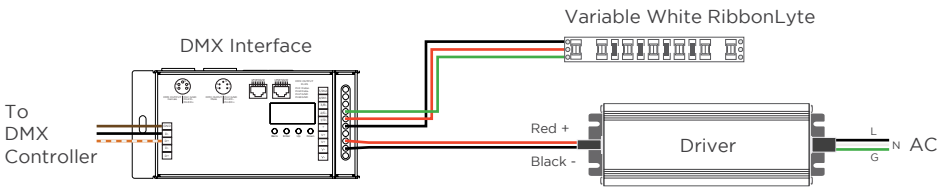

WIRE COLORS PER RIBBONLYTE COLOR

STATIC WHITE + STATIC COLOR
Red Wire (+) Positive
Black Wire (-) Negative

RGBW + RGBA
Black Wire (+) Positive
Red Wire (-) goes to Red Channel
Green Wire (-) goes to Green Channel
Blue Wire (-) goes to Blue Channel
White Wire (-) goes to White Channel

WARM DIM
Red Wire (-) goes to Warm White Channel
Blue Wire (-) goes to Cool White Channel
Black Wire (+) goes to Warm White Channel
Green Wire (+) goes to Cool White Channel

VARIABLE WHITE
Black Wire (+) Positive
Red Wire (-) goes to Warm White Channel
Green Wire (-) goes to Cool White Channel

WIRING DIAGRAMS WITH RGBW ADDRESSABLE RIBBONLYTE

One DMX Universe consists of 128 addresses and 512 channels (42 ft, 8 in. of RibbonLyte).

Any single run of RibbonLyte that is less than 16 ft, 4 in. can be wired directly to the controller.

For additional runs, Opto Splitter must be used. Each individual run will need its own Opto Splitter output.

WIRE INDEX

- 24V Negative
- 24V Positive
- DMX Ground
- DMX +
- DMX -

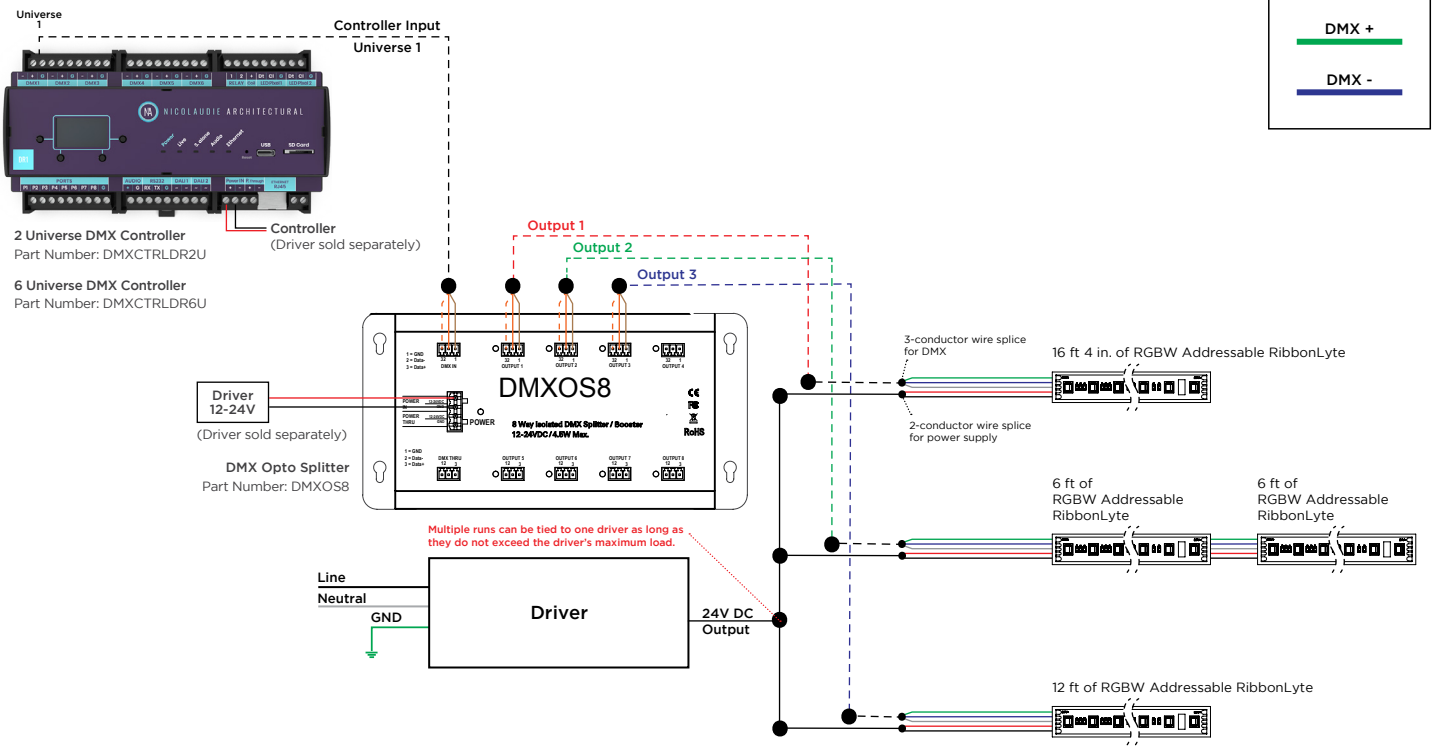

REV.11JUL2022