GEN LED acolyte® Architectural Lighting Solutions

Date | Project

Notes

RGB DIRECT AC RIBBONLYTE

Acolyte's RGB Direct AC RibbonLyte extends up to 100 ft on a single run with no drivers - perfect for long coves and other large spaces. It is factory cuttable every 1 foot.

- Directly input 120 Volts AC
- Max run length: 100 ft (30.48 m)
- Red, Green, Blue (color changing)
- Factory cuttable every 1 ft (304.8 mm)
- IP65
- Dimmable and color tunable with DMX controller
- Mounting clips included

Applications:

Commercial	Hospitality	Residential
Entertainment	Museums	Retail
Healthcare	Public Spaces	

IP65

ORDERING GUIDE

Category	CRI	Ribbon Type & IP Rating	Wattage + Color
RB	0	AC12065	3.0RGB
RB - RibbonLyte	0 - RGB	**AC12065 - Direct AC 120V IP65**	**3.0RGB - 3.0 RGB**

Connection Options:

RBACRGB2MI - 2-meter cable to bare wire

RBACRGB8MI - 8-meter cable to bare wire

RBACRGB4MJ - 4-meter jumper cable

RBACRGB30CJ - 30 cm jumper cable

RBACRGB6CJ - 6 cm jumper cable

Included Accessories:

Mounting Clip (1 clip per linear foot)

Optional Accessories:

Waterproof Cable Connector
(Part No.: COUPT654BK) see page 4 for instruction

120V DMX Interface Decoder
(Part No.: DMXINF120RGB) see page 6 for instruction

AVAILABLE COLOR TEMPERATURES

RGB

SPECIFICATIONS / DIMENSIONS / CHANNEL COMPATIBILITY

SPECIFICATIONS				
Operating Voltage	120VAC			
Power Consumption	3 W/ft (9.8 W/m)			
Current (mA)	25 mA/ft (82 mA/m)			
LED Pitch	36 LEDs/ft (120 LEDs/m)			
Protection Rating	IP65			
Dimming/Control	DMX			
Ambient Temperature	-4˚F - 113˚F (-20˚C - 45˚C)			
Color Temperatures	Red	Green	Blue	ALL
Wavelength (nm)	620 - 628	525 - 531	470 - 475	
Lumens	28 lm/ft (92 lm/m)	71 lm/ft (233 lm/m)	18 lm/ft (59 lm/m)	124 lm/ft (407 lm/m)
LED Beam Angle	150°			
Efficacy (lm/w)	29.6	79.9	22.6	43.4
Cuttable Length	1 ft (304.8 mm) Please account for the 0.5 in. / 12.7 mm RibbonLyte inside of the power feed cap and end cap when calculating the total run length (add 1 in. / 2.54 mm for each run). See next page for details.			
Max Run length	100 ft (30.48 m)			
Cable Length	2 meter cable molded end cap to bare wire (6.5 ft) 8 meter cable molded end cap to bare wire (26.2 ft) 4 meter cable molded end cap to molded end cap jumper (13.1 ft) 30 cm cable molded end cap to molded end cap jumper (11.8") 6 cm cable molded end cap to molded end cap jumper (2.4")			
Certifications	ETL Listed			
TM-21 Projection - L70 (10K) LED Lifetime	> 50,000 hours			

Dimensions	DIRECT AC RIBBONLYTE	MOUNTING CLIP (including 2 clips per foot)
Width	0.73 in / 18.5 mm (end cap and cable grip width: 1.44 in / 36.6 mm)	0.94 in / 23.9 mm
Length	100 ft (30.48 m) - max length. Factory cuttable every 1 ft (304.8 mm)	0.71 in / 18.0 mm
Height	0.28 in (7.1 mm)	0.48 in / 12.2 mm

Acolyte does not warrant or represent that the information is free from errors or omission. The information may change without notice and Acolyte is not in any way liable for the accuracy of any information printed and stored or in any way interpreted or used.

DIAGRAMS

Power Feed Cap & End Cap Dimensions

Top View

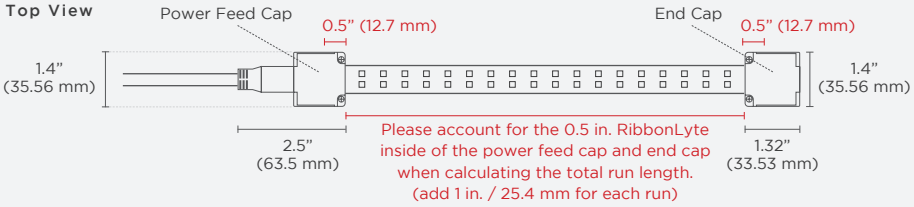

Width of End Cap: 1.4 in (35.56 mm)
Length of Power Feed Cap: 2.5 in (63.5 mm)
Length of End Cap: 1.32 in (33.53 mm)
Height of End Cap: 0.57 in (14.5 mm)

Side View

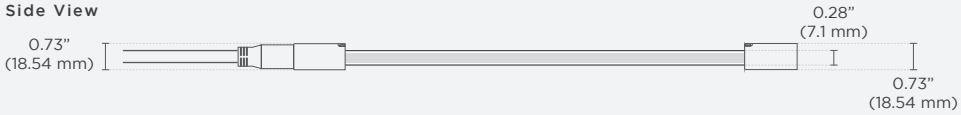

Height of RibbonLyte: 0.28 in (7.1 mm)
Height of Power Feed Cap: 0.73 in (18.54 mm)

Power Feed Options

Power Feed Option 1

2 meter molded end cap to bare wire
Part Number: RBACRGB2MI
Bare wire length: 6.5 ft (2 m)

Power Feed Option 2

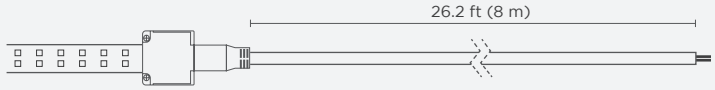

8 meter cable molded end cap to bare wire
Part Number: RBACRGB8MI
Bare wire length: 26.2 ft (8 m)

Power Feed Option 3

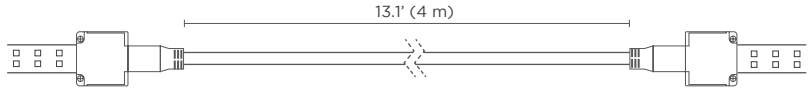

4 meter cable molded end cap to cable molded end cap jumper
Part Number: RBACRGB4MJ
Jumper cable length: 13.1' (4 m)

Power Feed Option 4

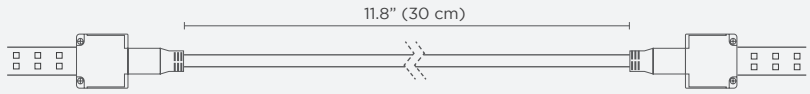

30 cm cable molded end cap to cable molded end cap jumper
Part Number: RBACRGB30CJ
Jumper cable length: 11.8" (30 cm)

Power Feed Option 5

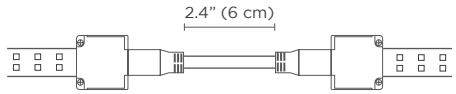

6 cm cable molded end cap to cable molded end cap jumper
Part Number: RBACRGB6CJ
Jumper cable length: 2.4" (6 cm)

SPECIFICATIONS

We provide 2m and 8m power feed solutions. If additional length is needed use the cable coupler.
Part No. : COUPT654BK

Dimensions (Part Number: COUPT654BK)

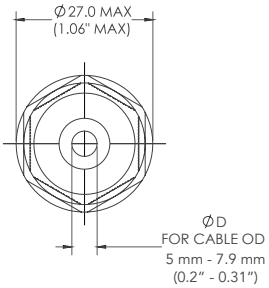

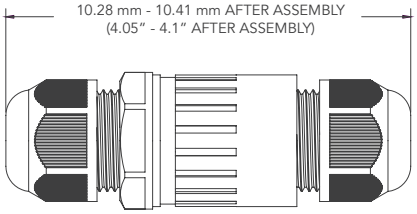

The Connector

Length: 4.05" - 4.10" After Assembly
Diameter: 1.06" MAX

Exploded View of the Connector

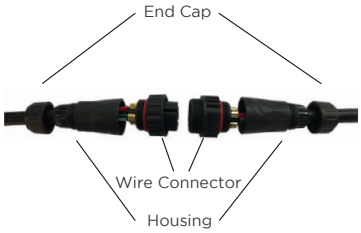

Step 1

Assemble cable from one end of the connector as shown above.

Step 2

Assemble cable from the other end of the connector as shown above. Make sure the wires go to their corresponding terminals (e.g. wire color matches to each other).

Step 3

Tighten two housings together and insert the rubber parts at the housing ends.

Step 4

Tighten two end caps.

USAGE GUIDELINES:

- **IP65 RibbonLyte are not field cuttable. All custom cuts and connections for these models must be performed at the factory to ensure waterproofing standards are met. Any modification of this on the field or by end user will result in a voided warranty.**
- **When installing this product take into account the surface temperature of the material this product is mounted to. Many building surfaces exceed the 45° C / 113° F maximum that our product is rated for. High-risk locations like this should be avoided. Avoid direct sunlight.**
- **This product is not intended to be submerged in pools and fountains and do not carry UL676 certification to do so.**

- Please refer to our RibbonLyte Proper Use Guide in our *Application Guide* for more information. Available for download at www.GENLEDBrands.com/Acolyte
- Compatible with a wide variety of control products including the entire line of Lutron dimming systems.
- For use with Acolyte drivers, 0-10V dimming modules and interface controllers (DMXINF models).
- Use with non-Acolyte supplied Triac, MLV or ELV drivers is not supported or warrantied.
- Due to the nature of the product, RibbonLyte cuttable lengths are generally longer or shorter than the customer requested length. Unless specified, RibbonLyte is factory cut at the shorter cuttable point.
- We reserve the right to make changes to product lineup, specifications, design and finishes at any time without notice.

DIMMING SYSTEM WIRING DIAGRAM

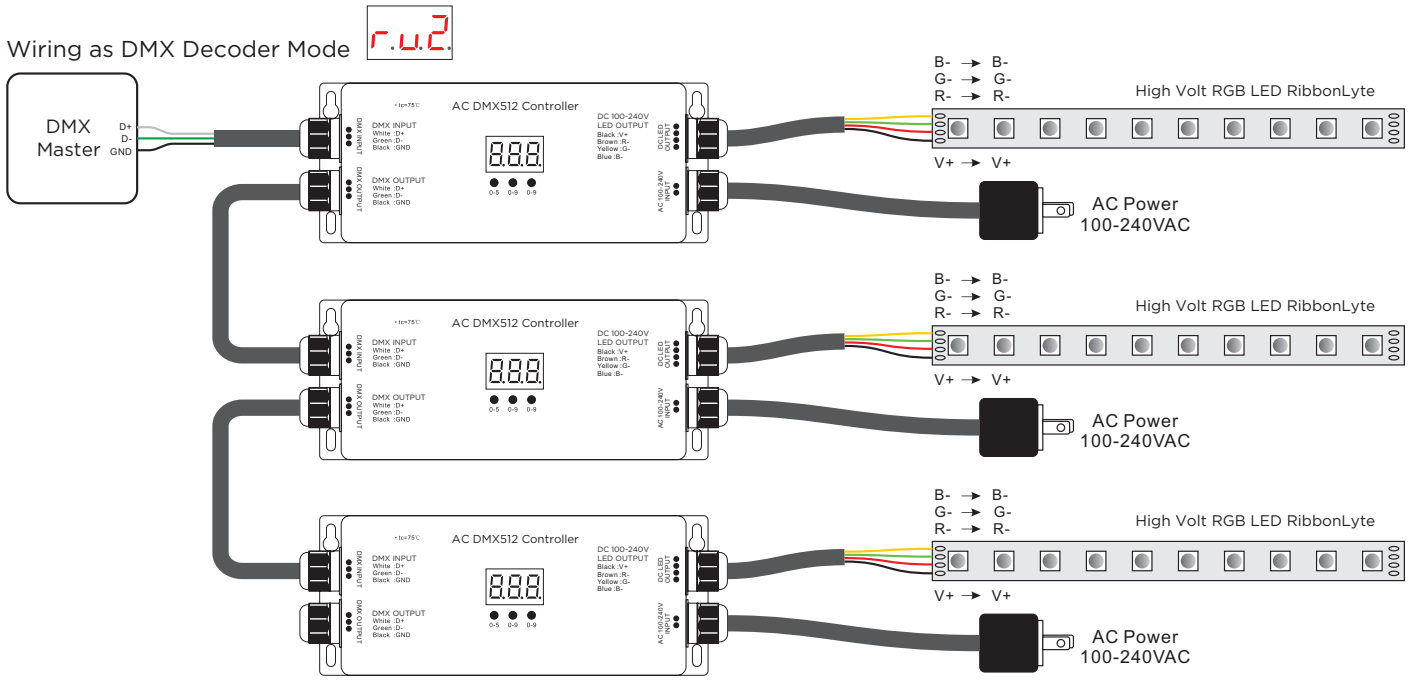

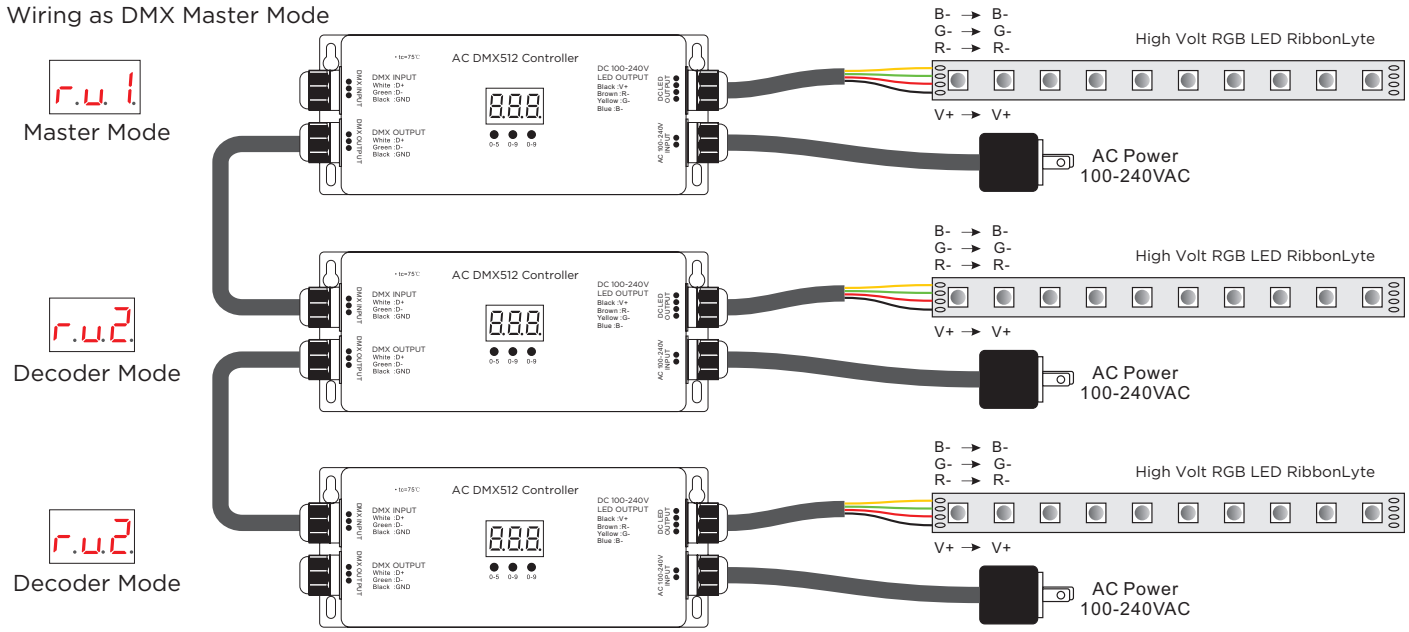

High Voltage 3 Channel DMX Interface

Width: 2.9 in (73.6 mm)
Length: 5.93 in (150.5 mm)
Depth: 1.38 in (35 mm)

Part Number: DMXINF120RGB

REV.04JUN2021