GEN LED acolyte® Architectural Lighting Solutions

Date | Project

Notes

## 120 V STATIC WHITE DIRECT AC RIBBONLYTE

Acolyte Static White Direct AC RibbonLyte extends up to 164 ft on a single run with no drivers - perfect for long coves and other large spaces. It is factory cuttable every 4 inches, compared to many competitors which are only cuttable every 1.5 feet.

- Directly input 120 Volts AC
- Max run length: 164 ft (50 m)
- 2400K, 2700K, 3000K, 3500K, 4000K, 5000K and 6000K. Other color temperatures may be available. Consult Factory.
- Factory cuttable every 4" (101.6 mm)
- 90+ CRI
- IP65
- Dimmable with Lutron Phase - Adaptive Power Module PHPM - WBX paired with Lutron 3-wire or Lutron 2-wire 0-10V dimmer
- Sold with AC plug or bare wire input (see page 3)
- Mounting clips included

### Applications:

| | | |
|---|---|---|
| Commercial | Hospitality | Residential |
| Entertainment | Museums | Retail |
| Healthcare | Public Spaces | |

RoHS IP65

## ORDERING GUIDE

| Category | CRI | Ribbon Type & IP Rating | Wattage + Color | |
|---|---|---|---|---|
| RB | 90 | AC12065 | | |
| **RB** - RibbonLyte | **90** - 90+ CRI Static White | **AC12065** - Direct AC 120V IP65 | **4.024** - 4.0 2400K | **4.040** - 4.0 4000K |
| | | | **4.027** - 4.0 2700K | **4.050** - 4.0 5000K |
| | | | **4.030** - 4.0 3000K | **4.060** - 4.0 6000K |
| | | | **4.035** - 4.0 3500K | |

**Connection Options:**

**RBAC2MI** - 2 meter cable to bare wire

**RBAC2MM6MI** - 2 meter cable to male connector + 6 meter cable to bare wire

**RBAC2MMI** - 2 meter cable to male connector (for daisy-chain use with 2MO output cable)

**RBAC15CMI** - 15cm cable to male connector (for daisy-chain use with 15CO output cable)

**RB2MAC** - 2 meter cable to AC Plug

**RBAC6CJ** - 6 cm jumper cable

**Included Accessories:**

Mounting Clip (1 clip per linear foot)

**Optional Accessories:**

**Waterproof Cable Connector**
(Part No.: COUPW683WH) See page 4 for instruction

**MAESTRO 3-wire Dimmer** (Part No.: RBACDIMMAES)

**Diva 3-wire Dimmer** (Part No.: RBACDIMDIVA)

**NOVAT 3-wire Dimmer** (Part No.: RBACDIMNOVAT)

**Phase Adaptive power Module** (Part No.: RBACPHPM1203W)

**0-10V Adapter** (Part No.: RBACDIM010ADPT)

**Diva 0-10V Dimmer** (Part No.: RBACDIMDIVA010)

**Nova T 0-10V Dimmer** (Part No.: LVDIMNOVA)

## AVAILABLE COLOR TEMPERATURES

2400K 2700K 3000K 3500K

4000K 5000K 6000K

## SPECIFICATIONS / DIMENSIONS / CHANNEL COMPATIBILITY

| SPECIFICATIONS | 120 V STATIC WHITE DIRECT AC RIBBONLYTE | | | | | | |
|---|---|---|---|---|---|---|---|
| Operating Voltage | 120 VAC | | | | | | |
| Power Consumption | 4 W/ft (13.1 W/m) | | | | | | |
| Current (mA) - 24V | 33 mA/ft (108.2 mA/m) | | | | | | |
| LED Pitch | 18 LEDs/ft (60 LEDs/m) | | | | | | |
| Protection Rating | IP65 | | | | | | |
| Dimming | Dimmable with Lutron Phase - Adaptive Power Module PHPM - WBX paired with Lutron 3-wire or Lutron 2-wire 0-10V dimmer. Use with 0-10V dimmer requires 0-10V adapter shown on pages 6 and 8 | | | | | | |
| Ambient Temperature | -4˚F -113˚F ( -20˚C - 45˚C) | | | | | | |
| Color Temperatures | 2400K | 2700K | 3000K | 3500K | 4000K | 5000K | 6000K |
| Lumens | 265.1 lm/ft (869.8 lm/m) | 274.5 lm/ft (900.5 lm/m) | 291.4 lm/ft (956.0 lm/m) | 311.1 lm/ft (1020.8 lm/m) | 308.4 lm/ft (1012.0 lm/m) | 307.1 lm/ft (1007.7 lm/m) | 314.2 lm/ft (1031.0 lm/m) |
| MacAdam's Ellipses (SDCM) | 2-Step Binning | | | | | | |
| LED Beam Angle | 120° | | | | | | |
| Cuttable Length | Every 4 in (101.6 mm) Please account for the 0.5 in. / 12.7 mm RibbonLyte inside of the power feed cap and end cap when calculating the total run length (add 1 in. / 2.54 mm for each run). See next page for details. | | | | | | |
| CRI - All Color Temp | 90+ CRI | | | | | | |
| Lumens/Watt | 65.2 lm/W | 67.6 lm/W | 71.2 lm/W | 76.6 lm/W | 75.6 lm/W | 75.2 lm/W | 76.2 lm/W |
| Cable Length | 2 meter Cable to Bare Wire: 6.5 ft (2 m); 2 meter Cable to Male Connector: 6.5 ft (2 m); 6 meter Cable to Bare Wire with Female Connector: 6.5 ft (2 m); 2 meter Cable to Female Connector: 6.5 ft (2 m); 6 meter Cable to Bare Wire with Female Connector: 6.5 ft (2 m); 15 cm Cable to Female Connector: 5.9 in (15 cm); 15 cm Cable to Bare Wire with Female Connector: 5.9 in (15 cm); 2 meter Cable to AC Plug: 6.5 ft (2 m) 6 cm cable molded end cap to molded end cap jumper (2.4") | | | | | | |
| Certifications | ETL Listed | | | | | | |
| TM-21 Projection - L70 (10K) LED Lifetime | > 60,000 hours at 85° C | | | | | | |

| Dimensions | DIRECT AC RIBBONLYTE | MOUNTING CLIP (including 2 clips per foot) |
|---|---|---|
| | | |
| Width | 0.62 in / 16 mm (end cap and cable grip width: 0.75 in / 20 mm) | 0.8 in / 20.32 mm |
| Length | 164 ft (50 m) - max length. Factory cuttable every 4 in (101.6 mm) | 0.43 in / 10.92 mm |
| Height | 0.21 in (5.3 mm) | 0.48 in / 12.19 mm |

Acolyte does not warrant or represent that the information is free from errors or omission. The information may change without notice and Acolyte is not in any way liable for the accuracy of any information printed and stored or in any way interpreted or used.

## DIAGRAMS

### Power Feed Cap & End Cap Dimensions

**Top View**

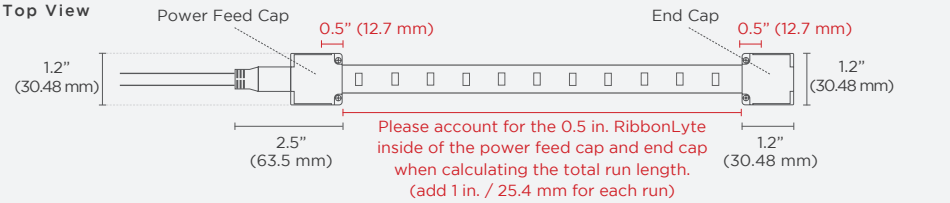


**Width of End Cap:** 1.2 in (30.48 mm)
**Length of End Cap:** 1.2 in (30.48 mm)
**Height of End Cap:** 0.57 in (14.5 mm)

**Side View**

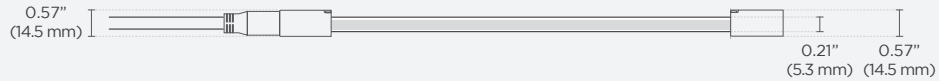


**Height of RibbonLyte:** 0.21 in (5.3 mm)
**Width of Power Feed Cap:** 1.2 in (30.48 mm)
**Length of Power Feed Cap:** 2.5 in (63.5 mm)
**Height of Power Feed Cap:** 0.57 in (14.5 mm)

### Power Feed Options

**Power Feed Option 1**

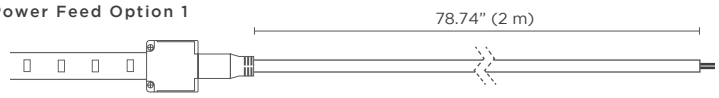


**2-meter Direct AC molded end cap to bare wire**
**Part Number: RBAC2MI**
**2-Meter Cable to Bare Wire:** 6.5 ft (2 m)

**Power Feed Option 2**

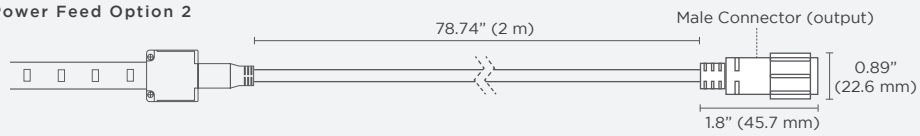


**2-meter Direct AC molded end cap to male connector**
**Part Number:** RBAC2MMI
**2-Meter Cable to Male Connector:** 6.5 ft (2 m)
**Male Connector Length:** 1.8 in (45.7 mm)
**Male Connector Diameter:** 0.89 in (22.6 mm)

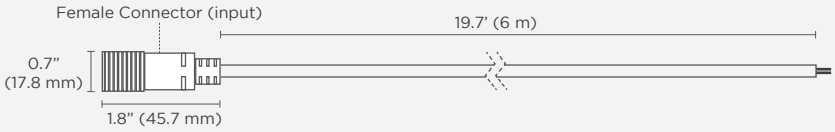


**6-meter Direct AC female connector to bare wire**
**Part Number:** RBAC6MI
**Female Connector Length: 2.5 in (63.5 mm)**
**Female Connector Diameter: 0.89 in (22.6 mm)**
**6-Meter Cable to Bare Wire with Female Connector: 6.5 ft (2 m)**

**Power Feed Option 3**

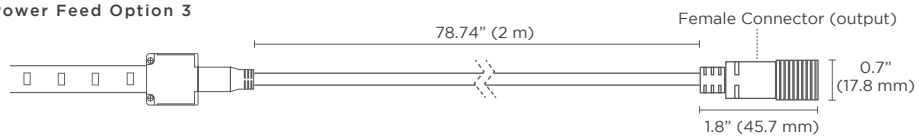


**2-meter Direct AC molded end cap to female connector (for daisy chains)**
**Part Number:** RBAC2MFO
**2-Meter Cable to Female Connector**: 6.5 ft (2 m)
**Female Connector Length:** 2.5 in (63.5 mm)
Female Connector Diameter: 0.89 in (22.6 mm)

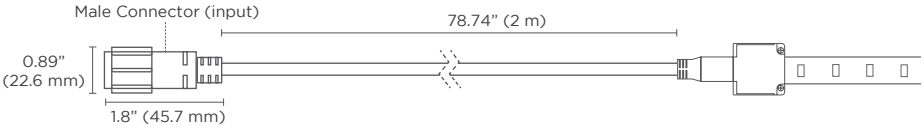


**2-meter Direct AC molded end cap to male connector**
**Part Number:** RBAC2MMI
**Male Connector Length:** 1.8 in (45.7 mm)
**Male Connector Diameter:** 0.89 in (22.6 mm)
**6-Meter Cable to Bare Wire with Female Connector:** 6.5 ft (2 m)

**Power Feed Option 4**

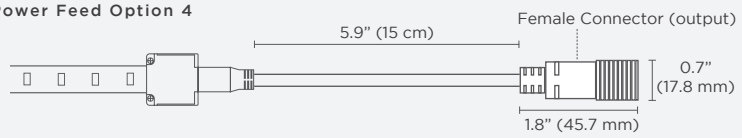


**15cm Direct AC molded end cap to female connector (for daisy chains)**
**Part Number:** RBAC15CFO
**15 cm Cable to Female Connector:** 5.9 in (15 cm)
**Female Connector Length:** 2.5 in (63.5 mm)
**Female Connector Diameter:** 0.89 in (22.6 mm)

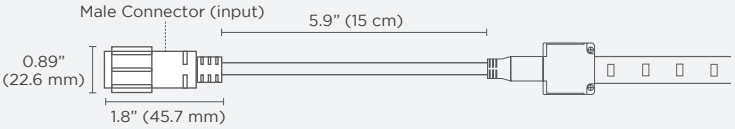


**15cm Direct AC molded end cap to male connector**
**Part Number: RBAC15CMI**
**Male Connector Length:** 1.8 in (45.7 mm)
**Male Connector Diameter:** 0.89 in (22.6 mm)
**15 cm Cable to Bare Wire with Female Connector:** 5.9 in (15 cm)

**Power Feed Option 5**

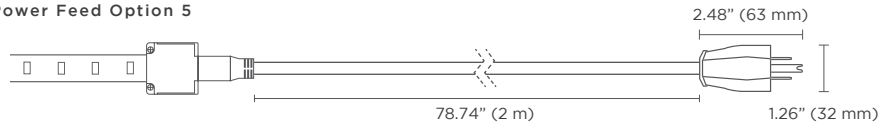


**2-meter Direct AC molded end cap to AC plug**
**Part Number:** RB2MAC
**2-Meter Cable to AC Plug:** 6.5 ft (2 m)
**AC Plug Length:** 2.48 in (63 mm)
**AC Plug Width:** 1.26 in (32 mm)

**Power Feed Option 6**

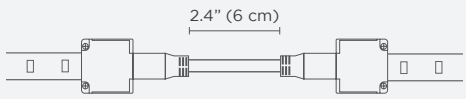


**6 cm cable molded end cap to cable molded end cap jumper**
**Part Number:** RBAC6CJ
**Jumper cable length:** 2.4" (6 cm)

## SPECIFICATIONS

We provide 2m and 8m power feed solutions. If additional length is needed, use the cable coupler.
**Part No. :** COUPW683WH

**Dimensions ( Part Number: COUPW683WH)**

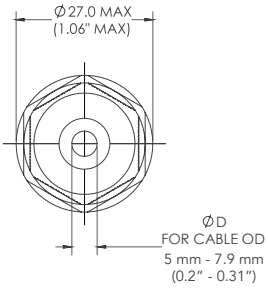


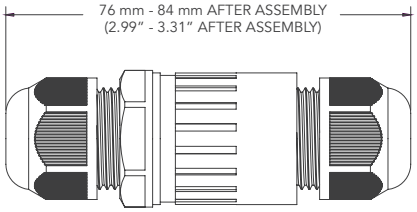


**The Connector**

**Length**: 2.99" - 3.31" After Assembly)
**Diameter**: 1.06" MAX

**Exploded View of the Connector**

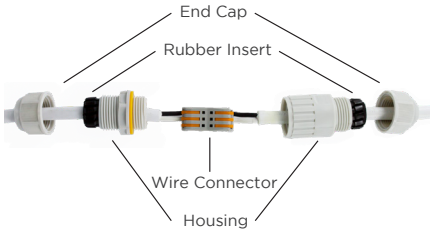


**Step 1**

Assemble cable from one end of the connector as shown above.

**Step 2**

Assemble cable from other end of the connector as shown above. Make sure the wires go to their corresponding terminals (e.g. wire color matches to each other).

**Step 3**

Tighten two housings together and insert the rubber parts at the housing ends.

**Step 4**

Tighten two end caps.

### USAGE GUIDELINES:

- **IP65 RibbonLyte are not field cuttable. All custom cuts and connections for these models must be performed at the factory to ensure waterproofing standards are met. Any modification of this on the field or by end user will result in a voided warranty.**
- **When installing this product take into account the surface temperature of the material this product is mounted to. Many building surfaces exceed the 45° C / 113° F maximum that our product is rated for. High-risk locations like this should be avoided. Avoid direct sunlight.**
- **This product is not intended to be submerged in pools and fountains and do not carry UL676 certification to do so.**

- Please refer to our RibbonLyte Proper Use Guide in our *Application Guide* for more information. Available for download at www.GENLEDBrands.com/Acolyte
- Compatible with a wide variety of control products including the entire line of Lutron dimming systems.
- For use with Acolyte drivers, 0-10V dimming modules and interface controllers (DMXINF models).
- Use with non-Acolyte supplied Triac, MLV or ELV drivers is not supported or warrantied.
- Due to the nature of the product, RibbonLyte cuttable lengths are generally longer or shorter than the customer requested length. Unless specified, RibbonLyte is factory cut at the shorter cuttable point.
- We reserve the right to make changes to product lineup, specifications, design and finishes at any time without notice.

## AVAILABLE CONTROLLERS

### LUTRON DIVA 3-WIRE DIMMER

Part No.: RBACDIMDIVA

Width: 2.94 In (75 Mm)
Length: 4.69 In (120 Mm)
Depth: 0.30 In (7.6 Mm)

- Use with Lutron Phase - Adaptive Power Module
- Large paddle switch with a captive linear-slide dimmer
- Available in white finish

* Requires Lutron Adaptive Power Module (Shown Below)

### LUTRON NOVA-T 3-WIRE DIMMER

Part No.: RBACDIMNOVAT

Width: 2.75 in (70 mm)
Length: 4.56 in (116 mm)
Depth: 0.30 in (7.6 mm)

- Slide adjusts brightness and On/Off control
- Available in white finish

* Requires Lutron Adaptive Power Module (Shown Below)

### LUTRON MAESTRO 3-WIRE DIMMER

Part No.: RBACDMIMMAES

Width: 2.94 in (75 mm)
Length: 4.69 in (120 mm)
Depth: 0.30 in (7.6 mm)

- Use with Lutron Phase Adaptive Power Module
- Large paddle switch with a captive linear-slide dimmer
- Available in white finish

* Requires Lutron Adaptive Power Module (Shown Below)

### LUTRON DIVA 0-10V DIMMER

Part No.: RBACDIMDIVA010

Width: 2.94 in (75 mm)
Length: 4.69 in (120 mm)
Depth: 0.30 in (7.6 mm)

- Compatible with 0-10 V Dimming Module
- Large paddle switch with a captive linear-slide dimmer
- Available in white finish

* Requires Lutron Adaptive Power Module and 0-10V Adapter (Both Shown Below)

### LUTRON NOVA-T 0-10V DIMMER

Part No.: LVDIMNOVA

Width: 2.75 in (70 mm)
Length: 4.56 in (116 mm)
Depth: 0.30 in (7.6 mm)

- Compatible with 0-10 V dimming module
- Slide adjusts brightness and on/off control
- Available in white finish

* Requires Lutron Adaptive Power Module and 0-10V Adapter (Both Shown Below)

### LUTRON ADAPTIVE POWER MODULE

Part No.: RBACPHPM1203W

Width: 6.30 In (160 Mm)
Length: 5.10 In (130 Mm)
Depth: 2.60 In (62 Mm)

- Use for 3-wire fluorescent dimmers
- Load current capacity up to 16A
- Available in White finish

### 0-10V ADAPTER

Part No.: RBACDIM010ADPT

Width: 9.51 in (241 mm)
Length: 2.38 in (60 mm)
Height: 1.50 in (38 mm)

- Capable of interfacing 0–10 V controllers to Lutron 3-wire dimmable ballasts, drivers, or interfaces
- Controls up to 16A of Lutron 3-wire dimmable ballasts, drivers, or interfaces
- Must be used in conjunction with Lutron Adaptive Power Module shown at left and with one of the two 0-10V dimmers shown above

## DIMMING SYSTEM WIRING DIAGRAM

### ADAPTIVE POWER MODULE (RBACPHPM1203W) WITH 3-WIRE DIVA DIMMER (RBACDIMDIVA)

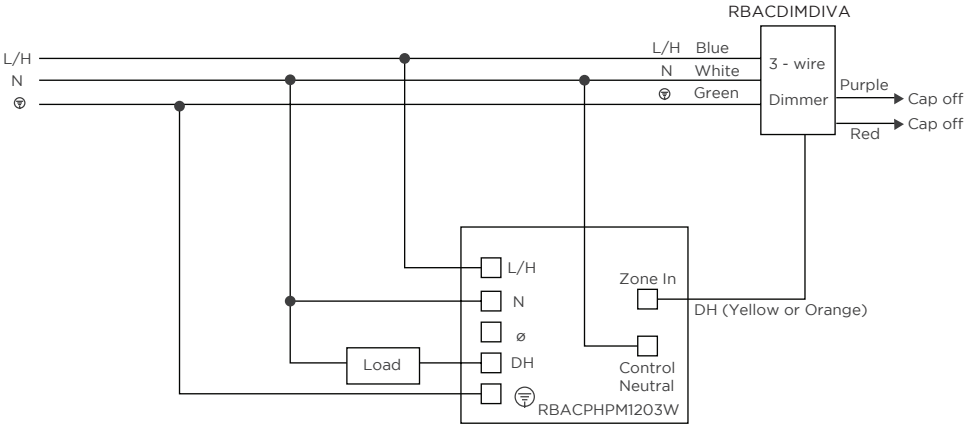


### ADAPTIVE POWER MODULE (RBACPHPM1203W) WITH 3-WIRE NOVA T DIMMER (RBACDIMNOVAT)

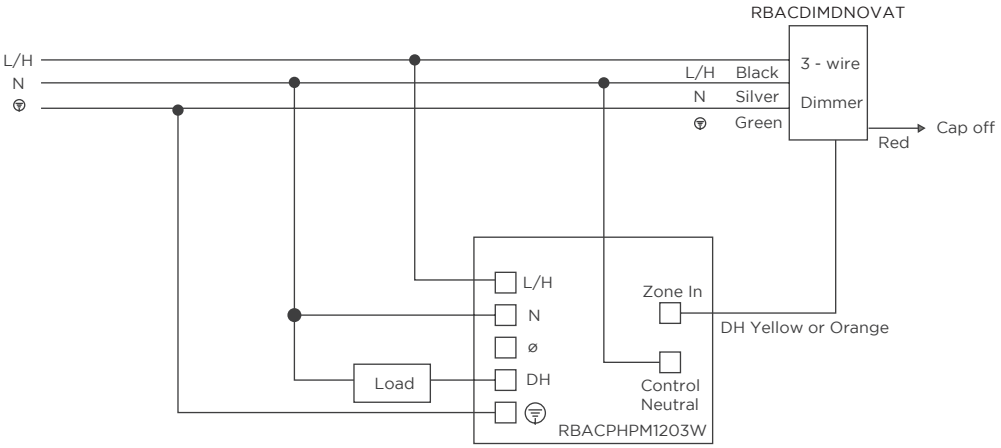


### ADAPTIVE POWER MODULE (RBACPHPM1203W) WITH 3-WIRE MAESTRO DIMMER (RBACDMIMMAES)

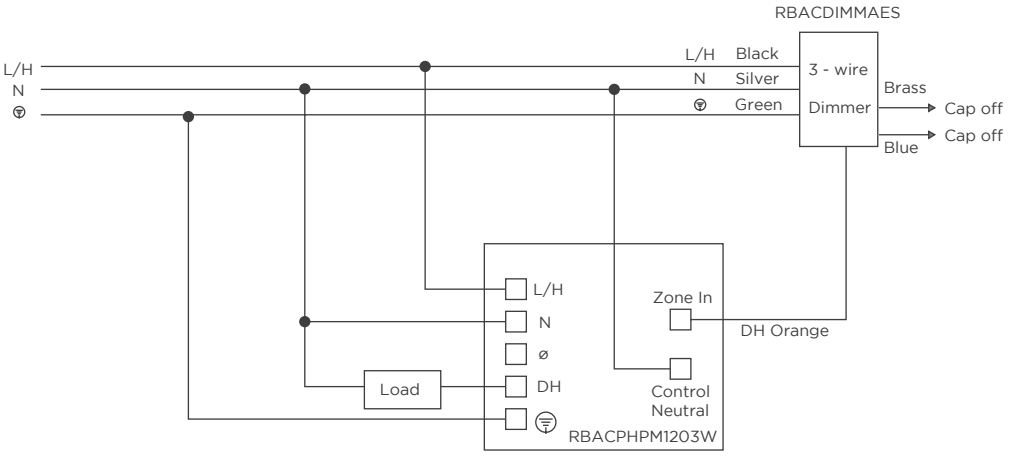


• Please reference Page 6 for more controller details.

### LEGEND

**L/H** - Line/Hot

**N** - Neutral

**Ø** - Not Used

**DH** - Dimmed Hot

**SH** - Switched Hot

- Ground

## DIMMING SYSTEM WIRING DIAGRAM

### ADAPTIVE POWER MODULE (RBACPHPM1203W) CONTROL FROM 0-10 DIMMER (RBACDIMDIVA010) THROUGH A 0-10V ADAPTER (RBACDIM010ADPT)

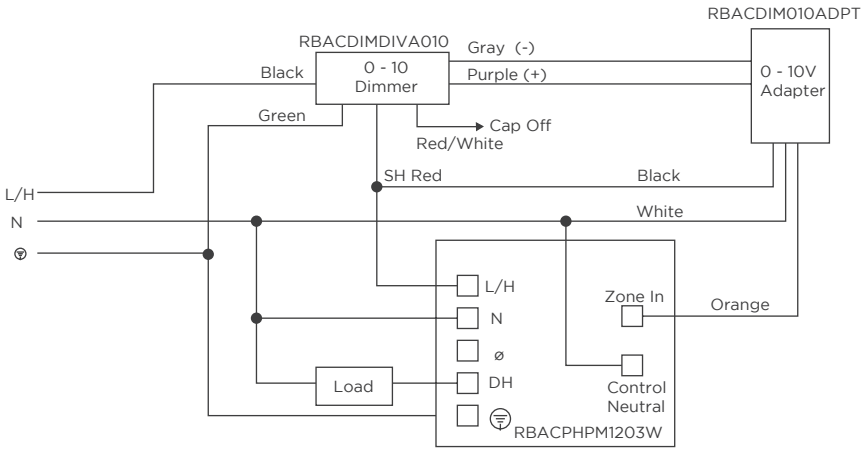


### ADAPTIVE POWER MODULE (RBACPHPM1203W) CONTROL FROM 0-10V DIMMER (LVDIMNOVA) THROUGH A 0-10V ADAPTER (RBACDIM010ADPT)

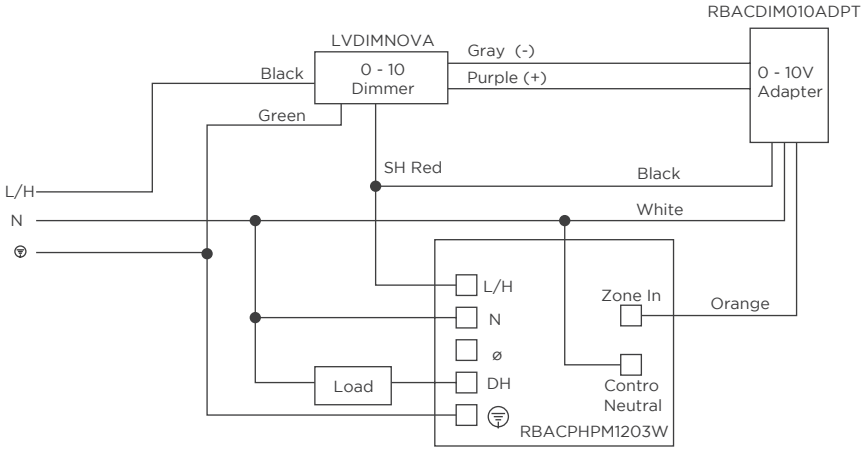


• Please reference Page 6 for more controller details.

**LEGEND**

**L/H -** Line/Hot

**N -** Neutral

**Ø -** Not Used

**DH -** Dimmed Hot

**SH -** Switched Hot

- Ground

REV.04JUN2021