GEN LED acolyte® Architectural Lighting Solutions

Date | Project

Notes

SIMPLY CLEAN™ RECESSED FIXTURE SC3

Made from aluminum, UV-resistant and available in any length, Simply Clean™ SC3 recessed fixtures offer a variety of mounting options. Our smallest Simply Clean™ channel, SC3 has a 90º beam angle and can be installed in walls and ceilings or along a ceiling edge. Design a custom fixture with Simply Clean™ channels and RibbonLyte products.

- Available for field assembly or factory assembly
- Wall recessed fixture
- Sold by the foot. Factory or field cuttable to any length.
- Adds an element of style and design to existing spaces
- Aluminum Channel with UV Resistant Lenses
- Wattages: 0.75 W/ft, 1.5 W/ft, 2.2 W/ft, 3 W/ft, 4.4 W/ft, 5.0 W/ft, 5.2 W/ft, 5.5 W/ft, 6.0 W/ft, 8.8 W/ft
- Assembled in USA

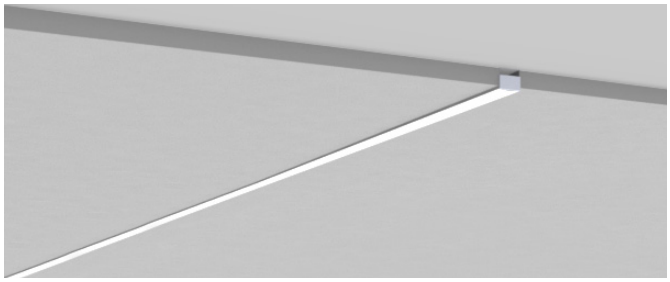

RoHS IP20

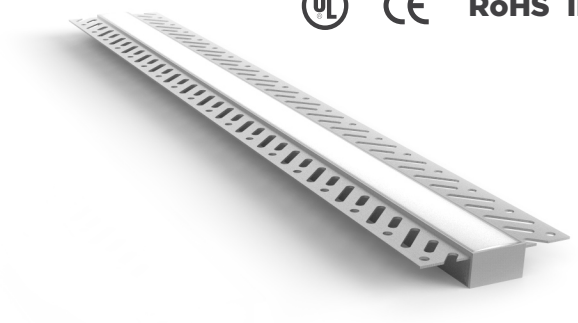

HOUSING FINISH

Silver

AVAILABLE LENS FINISHES

Milky Lens
70% Light Transmission

AVAILABLE COLORS & COLOR TEMPERATURES

1800K 2000K 2200K 2400K 2700K 3000K 3500K 4000K 6000K Red Amber Green Blue RGBW RGBA RGBWW VW WD

DIMENSIONS

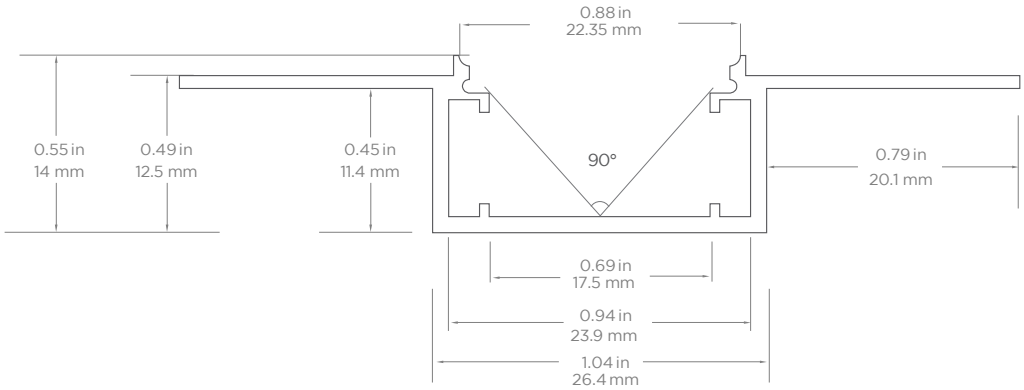

Visible Width: 0.88 in. (22.35 mm)
Height: 0.55 in. (14 mm)
Internal Width: 0.69 in. (17.5 mm)

Note: This channel does not require mounting clips. Please see our installation guide for instructions.

Acolyte does not warrant or represent that the information is free from errors or omission. The information may change without notice and Acolyte is not in any way liable for the accuracy of any information printed and stored or in any way interpreted or used.

SPECIFICATIONS

Beam Angle	90°
Lens Type	Milky Lens
Length	Channel is sold by the foot and cut to your exact desired length
Operating Voltage	24V
Dimming	MLV / 0-10 Volt / Lutron Hi-Lume 1% dimming LED drivers / Lutron VIVE code compliance available / ELV / DALI / DMX
Operating Temperature	-40° F to 158° F (-40° C to 70° C)
Colors	1800K, 2000K, 2200K, 2400K, 2700K, 3000K, 3500K, 4000K, 6000K, Red, Amber, Green, Blue, RGBA, RGBW, RGBWW, VW, Warm Dim (1800K, 2000K, 2200K only available in IP20)
CRI	90+ CRI (Static white only)
Lamp Life	L70 at 50,000 Hours
MacAdam Ellipses (SDCM)	2-Step Binning (For Static White LEDs only)
Certifications	UL Listed UL 2108 Issued: 2004/02/27 Ed: 1 Rev: 2014/02/24 Low Voltage Lighting Systems CSA C22.2#9.0 Issued: 1996/06/01 Ed: 1 (R2011) General Requirements for Luminaries; with Gen. Inst. 1: 1997, Gen Inst. 2: 1998. ROHS compliant
Recessed Cutout Width	1.04 in (26.4 mm)
Depth In Wall	0.45 in (11.4 mm)
Length	Sold by the foot. Factory cuttable to any length. Max individual length of each piece is 78.7" (2m), but the fixture can be installed end-to-end to create long continuous recessed fixtures.
Visible Lens Width	0.88 in / 22.35 mm

EXPLODED VIEW

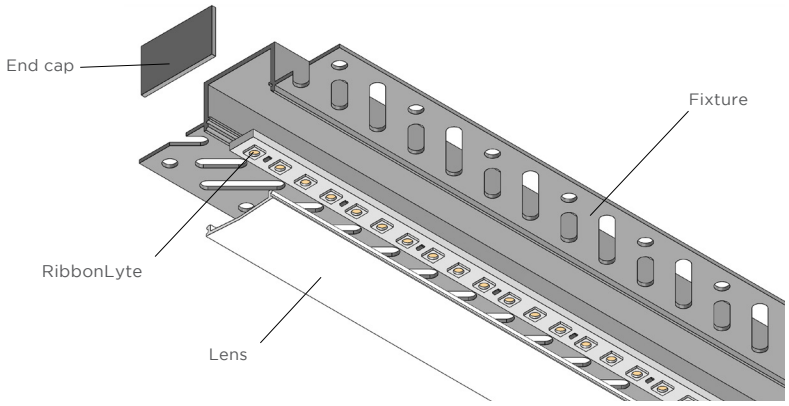

See basic installation steps on page 6.

END VIEW

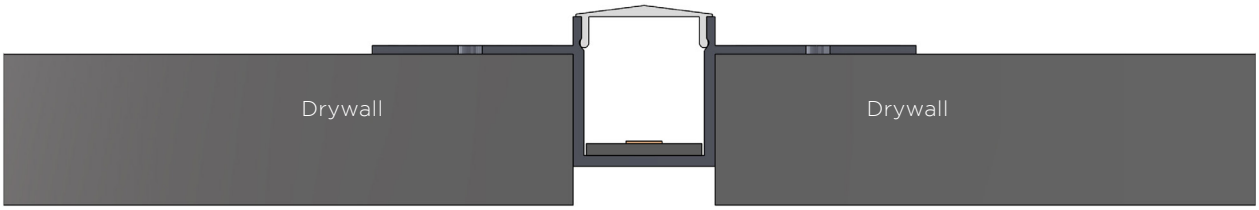

Acolyte does not warrant or represent that the information is free from errors or omission. The information may change without notice and Acolyte is not in any way liable for the accuracy of any information printed and stored or in any way interpreted or used.

STEP 1 Complete Channel Part Number

CHANNEL	LENS	HOUSING COLOR
CHSC3	M	SV
CHSC3 - Simply Clean™ SC3 Recessed Fixture	**M** - Milky Lens	**SV** - Silver (default)

STEP 2 Complete RibbonLyte Part Number

CATEGORY	CRI	RIBBON TYPE & IP RATING		
RB				
RB - RibbonLyte	**0** - Static Color, Color Changing	**SWS220** - Static White S2 IP20	**VWS220** - VW Series 2 IP20	**RGBWA20** - RGBW/RGBA IP20
	90 - 90+ CRI Static White	**SCS220** - Static Colors S2 IP20	**RGBWS220** - RGBW Series 2 IP20	**WD20** - Warm Dim IP20
		RGBWW20 - RGBWW 5-in-1 IP20		

WATTAGE

- **0.75** - 0.75 W/ft (2.46 W/m - Static White, Static Color)
- **1.0** - 1.0 W/ft (3.3 W/m - Variable White)
- **1.5** - 1.5 W/ft (4.9 W/m - Static White, Static Color)
- **2.2** - 2.2 W/ft (7.2 W/m - Static White, Static Color)
- **3.0** - 3.0 W/ft (9.8 W/m - Static White, Static Color, Variable White)
- **4.4** - 4.4 W/ft (14.4 W/m - Static White, Static Color, RGBW, RGBWW, RGBA)
- **5.2** - 5.2 W/ft (17.1 W/m - Warm Dim)
- **5.0** - 5.0 W/ft (16.4 W/m - Static White, Static Color)
- **5.5** - 5.5 W/ft (18.0 W/m - RGBW, RGBA)
- **6.0** - 6.0 W/ft (19.7 W/m - Static White, Static Color, Variable White)
- **8.8** - 8.8 W/ft (28.86 W/m - RGBW, RGBWW)

COLOR

- **18** - 1800K
- **20** - 2000K
- **22** - 2200K
- **24** - 2400K
- **27** - 2700K
- **30** - 3000K
- **35** - 3500K
- **40** - 4000K
- **60** - 6000K
- **R** - Red
- **A** - Amber
- **G** - Green
- **B** - Blue
- **RGB27** - Red, Green, Blue + 2700K
- **RGB30** - Red, Green, Blue + 3000K
- **RGB40** - Red, Green, Blue + 4000K
- **RGB60** - Red, Green, Blue + 6000K
- **RGB2465** - Red, Green, Blue + 2400K + 6500K
- **RGBA** - Red, Green, Blue + Amber
- **VW** - Variable White
- **2920** - Warm Dim 2900K-2000K (IP20)
- **2721** - Warm Dim 2900K-2000K (IP65)
- **Z** - Undecided**

** For quotes only. Must be chosen before final order.

CONNECTION OPTIONS (See diagrams on the right)

- **1** - End Feed Bare Wire Connection
- **2** - Back Feed Bare Wire Connection
- **3** - Side Feed Bare Wire Connection
- **4** - End Feed with IP67 Male Coupler
- **5** - Soldered Daisy Chain
- **6** - Daisy Chain With IP67 Couplers

Custom Length (ft.)

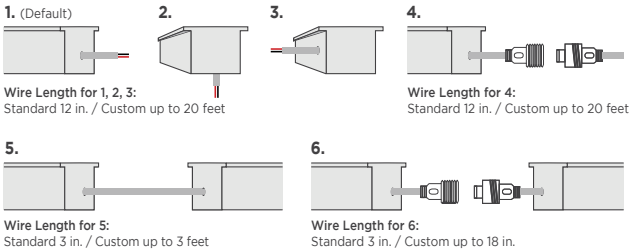

STEP 3 Complete Assembly Option & Length

ASSEMBLY OPTION	LENGTH (Standard factory assembled length up to 78 in. / 2 m)
FI - Field Assembly	
FA - Factory Assembly	

RIBBONLYTE SPECIFICATIONS & COMPATIBILITY

Available Wattages	Cuttable Length	LED Pitch	Color Temp.	lm/W without Lens	Delivered Lumens with Milky Lens	Max Length	Compatible with Channel IP20
0.75 Static White Series 2	1.97 in (50 mm)	48 LEDs/ft (160 LEDs/m)	1800K	84	44.1 lm/ft (144.6 lm/m)	49 ft (15 m)	✓
			2000K	99	52 lm/ft (170.6 lm/m)		
			2200K	109	57.2 lm/ft (187.6 lm/m)		
			2400K	113	59.3 lm/ft (194.5 lm/m)		
			2700K	123	64.6 lm/ft (211.9 lm/m)		
			3000K	123	64.6 lm/ft (211.9 lm/m)		
			3500K	130	68.3 lm/ft (224 lm/m)		
			4000K	134	70.4 lm/ft (230.9 lm/m)		
			6000K	131	68.8 lm/ft (225.7 lm/m)		
1.5 Static White Series 2	1.97 in (50 mm)	48 LEDs/ft (160 LEDs/m)	1800K	84	88.2 lm/ft (289.3 lm/m)	49 ft (15 m)	✓
			2000K	98	102.9 lm/ft (337.5 lm/m)		
			2200K	109	114.5 lm/ft (375.6 lm/m)		
			2400K	113	118.7 lm/ft (389.3 lm/m)		
			2700K	123	129.2 lm/ft (423.8 lm/m)		
			3000K	123	129.2 lm/ft (423.8 lm/m)		
			3500K	129	135.5 lm/ft (444.4 lm/m)		
			4000K	134	140.7 lm/ft (461.5 lm/m)		
			6000K	131	137.6 lm/ft (451.3 lm/m)		
2.2 Static White Series 2	1.97 in (50 mm)	48 LEDs/ft (160 LEDs/m)	1800K	83	127.8 lm/ft (419.2 lm/m)	42 ft (12.8 m)	✓
			2000K	96	147.8 lm/ft (484.8 lm/m)		
			2200K	106	163.2 lm/ft (535.3 lm/m)		
			2400K	111	170.9 lm/ft (560.6 lm/m)		
			2700K	120	184.8 lm/ft (606.1 lm/m)		
			3000K	122	187.9 lm/ft (616.3 lm/m)		
			3500K	127	195.6 lm/ft (641.6 lm/m)		
			4000K	133	204.8 lm/ft (671.7 lm/m)		
			6000K	128	197.1 lm/ft (646.5 lm/m)		
3.0 Static White Series 2	1.97 in (50 mm)	48 LEDs/ft (160 LEDs/m)	2400K	109.8	230.6 lm/ft (756.5 lm/m)	36 ft (11 m)	✓
			2700K	122.9	258.1 lm/ft (846.7 lm/m)		
			3000K	130	273 lm/ft (895.3 lm/m)		
			3500K	133	279.3 lm/ft (916.1 lm/m)		
			4000K	133	279.3 lm/ft (916.1 lm/m)		
			6000K	127	266.6 lm/ft (874.5 lm/m)		
4.4 Static White Series 2	1.97 in (50 mm)	48 LEDs/ft (160 LEDs/m)	2400K	109	335.7 lm/ft (1101.2 lm/m)	28 ft 4 in. (8.64 m)	✓
			2700K	122	375.8 lm/ft (1232.5 lm/m)		
			3000K	129	397.3 lm/ft (1303.2 lm/m)		
			3500K	132	406.6 lm/ft (1333.5 lm/m)		
			4000K	132	406.6 lm/ft (1333.5 lm/m)		
			6000K	126	388.1 lm/ft (1272.9 lm/m)		
5.0 Static White Series 2	1.4 in (35.7 mm)	68 LEDs/ft (224 LEDs/m)	2400K	109.8	384.4 lm/ft (1260.8 lm/m)	33 ft 4 in. (10.1 m)	✓
			2700K	122.9	430.2 lm/ft (1411.2 lm/m)		
			3000K	130	454.9 lm/ft (1492.1 lm/m)		
			3500K	133	465.5 lm/ft (1526.8 lm/m)		
			4000K	133	465.5 lm/ft (1526.8 lm/m)		
			6000K	127	444.3 lm/ft (1457.4 lm/m)		

SPECIFICATIONS

Available Wattages	Cuttable Length	LED Pitch	Color Temp.	lm/W Delivered	Delivered Lumens with Milky Lens	Max Length	Compatible with Channel IP20
6.0 Static White Series 2	1.4 in (35.7 mm)	68 LEDs/ft (224 LEDs/m)	2400K	109	457.8 lm/ft (1501.6 lm/m)	28 ft (8.5 m)	✓
			2700K	122	512.4 lm/ft (1680.7 lm/m)		
			3000K	129	541.8 lm/ft (1777.1 lm/m)		
			3500K	132	554.4 lm/ft (1818.4 lm/m)		
			4000K	132	554.4 lm/ft (1818.4 lm/m)		
			6000K	126	529.2 lm/ft (1735.8 lm/m)		
0.75 Static Color Series 2	1.97 in (50 mm)	48 LEDs/ft (160 LEDs/m)	Red	41	22 lm/ft (70.6 lm/m)	49 ft (15 m)	✓
			Green	175	92 lm/ft (301.4 lm/m)		
			Amber	19	10 lm/ft (32.7 lm/m)		
			Blue	34	18 lm/ft (58.6 lm/m)		
1.5 Static Color Series 2	1.97 in (50 mm)	48 LEDs/ft (160 LEDs/m)	Red	42	44 lm/ft (144.7 lm/m)	49 ft (15 m)	✓
			Green	160	168 lm/ft (551.1 lm/m)		
			Amber	18	19 lm/ft (62 lm/m)		
			Blue	34	36 lm/ft (117.1 lm/m)		
2.2 Static Color Series 2	1.97 in (50 mm)	48 LEDs/ft (160 LEDs/m)	Red	42	65 lm/ft (212.2 lm/m)	42 ft (12.8 m)	✓
			Green	145	223 lm/ft (732.4 lm/m)		
			Amber	18	28 lm/ft (90.9 lm/m)		
			Blue	33	51 lm/ft (166.7 lm/m)		
3.0 Static Color Series 2	1.97 in (50 mm)	48 LEDs/ft (160 LEDs/m)	Red	40	84.0 lm/ft (275.52 lm/m)	32.8 ft (10 m)	✓
			Green	127	266.7 lm/ft (874.776 lm/m)		
			Amber	25	52.5 lm/ft (172.2 lm/m)		
			Blue	29	60.9 lm/ft (199.752 lm/m)		
4.4 Static Color Series 2	1.97 in (50 mm)	48 LEDs/ft (160 LEDs/m)	Red	38	117.0 lm/ft (383.8912 lm/m)	29 ft (8.8 m)	✓
			Green	117	360.4 lm/ft (1181.981 lm/m)		
			Amber	24	73.9 lm/ft (242.4576 lm/m)		
			Blue	25	77.0 lm/ft (252.56 lm/m)		
5.0 Static Color Series 2	1.4 in (35.7 mm)	68 LEDs/ft (224 LEDs/m)	Red	37	129.5 lm/ft (424.76 lm/m)	30 ft (9.14 m)	✓
			Green	116	406.0 lm/ft (1331.68 lm/m)		
			Amber	24	84.0 lm/ft (275.52 lm/m)		
			Blue	26	91.0 lm/ft (298.48 lm/m)		
6.0 Static Color Series 2	1.4 in (35.7 mm)	68 LEDs/ft (224 LEDs/m)	Red	37	155.4 lm/ft (509.712 lm/m)	28 ft (8.5 m)	✓
			Green	113	474.6 lm/ft (1556.688 lm/m)		
			Amber	23	316.848 lm/ft (1777.1 lm/m)		
			Blue	24	330.624 lm/ft (1818.4 lm/m)		
1.0 Variable White Series 2	1.97 in (50 mm)	42 LEDs/ft (140 LEDs/m)	2000K + 6500K	85	60 lm/ft (200 lm/m)	32.8 ft (10 m)	✓
3.0 Variable White Series 2	1.97 in (50 mm)	42 LEDs/ft (140 LEDs/m)	2000K + 6500K	80	168.0 lm/ft (551.2 lm/m)	32.8 ft (10 m)	✓
6.0 Variable White Series 2	1.97 in (50 mm)	42 LEDs/ft (140 LEDs/m)	2000K + 6500K	75	315.0 lm/ft (1033.5 lm/m)	32.8 ft (10 m)	✓
4.4 RGBW Series 2	1.97 in. (50 mm)	36 LEDs/ft (120 LEDs/m)	RGBW	45	138.6 lm/ft (454.7 lm/m) All LEDs at 100%	19 ft 8 in. (6 m)	✓
8.8 RGBW Series 2	1.97 in. (50 mm)	36 LEDs/ft (120 LEDs/m)	RGBW	61	375.8 lm/ft (1232.9 lm/m) All LEDs at 100%	16 ft 4 in. (5 m)	✓
5.5 4-in-1 RGBW	3.94 in (100 mm)	18 LEDs/ft (60 LEDs/m)	RGBW	36	195.3 lm/ft (640.5 lm/m) All LEDs at 100%	19 ft 7.9 in. (6 m)	✓
5.5 4-in-1 RGBA	3.94 in (100 mm)	18 LEDs/ft (60 LEDs/m)	RGBA	36	195.3 lm/ft (640.5 lm/m) All LEDs at 100%	19 ft 7.9 in. (6 m)	✓
4.4 5-in-1 RGBWW	2.46 in. (62.5 mm)	29 LED/ft (96 LED/m)	RGBWW	59	194.7 lm/ft (638.8 lm/m) All LEDs at 100%	16 ft 4 in (5 m)	✓
8.8 5-in-1 RGBWW	2.46 in. (62.5 mm)	29 LED/ft (96 LED/m)	RGBWW	50	330.0 lm/ft (1082.7 lm/m) All LEDs at 100%	11 ft 6 in (3.5 m)	✓
5.2 Warm Dim	3.94 in (100 mm)	36 LEDs/ft (120 LEDs/m)	WARM DIM	39	201.6 lm/ft (661.5 lm/m)	16 ft 4 in. (5 m)	✓

DIODE VISIBILITY CHART (Data below applies to installations with Milky lens only)

No Visible Diode = N

With Visible Diode = Y

Static White & Static Color RibbonLyte			Color Changing RibbonLyte						
0.75/1.5/2.2	3.0/4.4	5.0/6.0	4.4 RGBW Series 2	8.8 RGBW Series 2	4.4 RGBW/A	5.5 4-in-1 RGBW/A	4.4/8.8 5-in-1 RGBWW	Warm Dim	Variable White
IP20	IP20	IP20	IP20	IP20	IP20	IP20	IP20	IP20	IP20
N	N	N	Y	Y	Y	Y	Y	N	N

BASIC INSTALLATION (DOUBLE FLANGE)

1. Measure and cut a recess in the drywall and place the Fixture (A) into the recess, making sure the flanges sit flush on both walls.

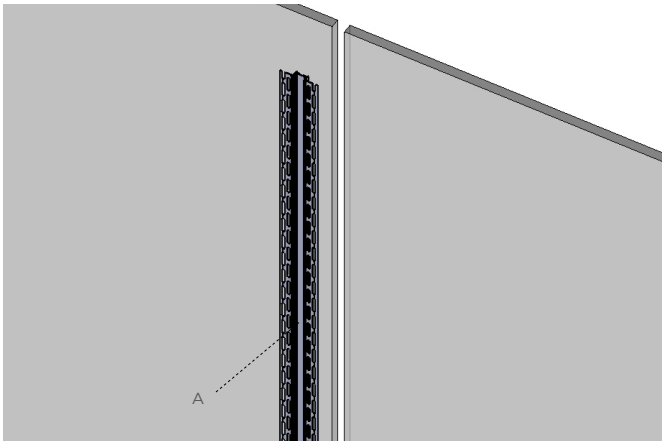

2. Fasten the Fixture (A) by inserting drywall screws** through the flanges on both sides approximately every 18". Insert the Ribbonlyte into the fixture.

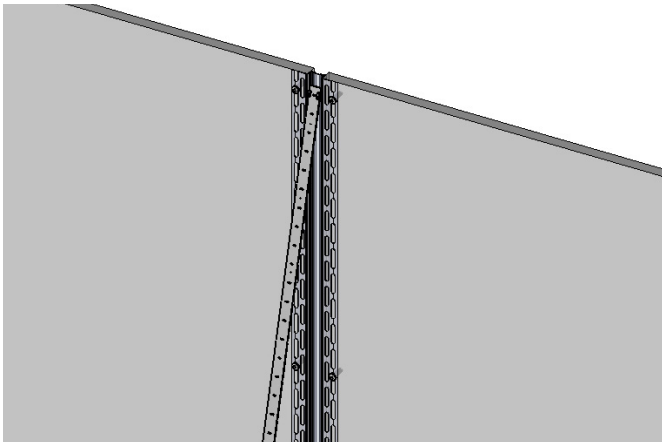

3. Plaster over the flanges and screws up to the lip in the fixture to create a seamless joint. Use plaster tape to preserve the lens and visible portion of the Fixture (A).

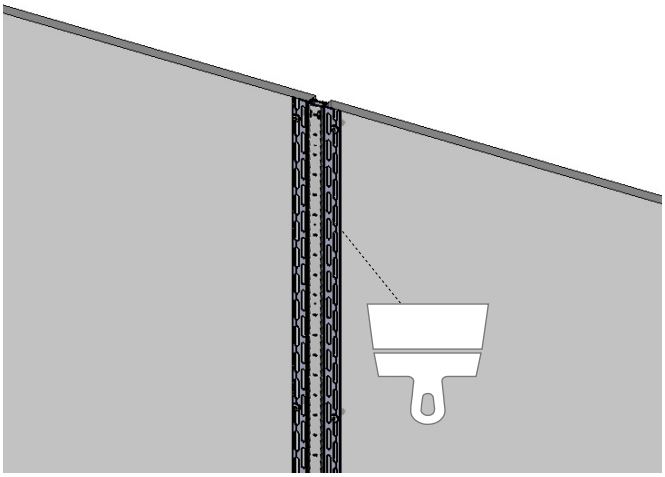

4. Insert the Lens by snapping it into place. Press fit the End Caps to complete the assembly.

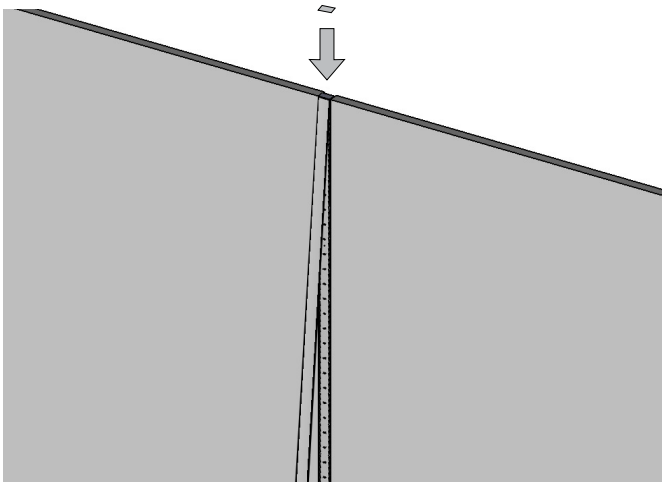

* See SC3 installation guide for full installation steps.
** Recommended screw size: 4-40/48 countersunk flat head

AVAILABLE DRIVERS

NON-DIMMING ELECTRONIC DRIVERS

30W, 60W, 96W
Non-Dimming Electronic
Class 2 Drivers

Part No.:
- DRVW2430 (30 Watt)
- DRVW2460 (60 Watt)
- DRVW2496 (96 Watt)

Output Voltage: 24 V
Voltage Range: 120-277 VAC
IP Rating: Dry or Damp
UL Listed

240W, 320W
Non-Dimming
Electronic Drivers

Part No.:
- DRVW24240 (240 Watt)
- DRVW24320 (320 Watt)

Output Voltage: 24 V
Voltage Range: 90-305 VAC
IP Rating: Dry or Damp
UL Recognized

ELV & MLV DRIVERS WITH COMPATIBLE DIMMERS

60W, 96W, 150W, 300W
ELV/MLV Dimmable Drivers

Part No.:
- DRVW2460ELVMLV (60 Watt)
- DRVW2496ELVMLV (96 Watt)
- DRVW24150ELVMLV (150 Watt)
- DRVW24300ELVMLV (300 Watt)

Line Voltage Dimmable Drivers
Output Voltage: 24 V
Voltage Range: 100-277 VAC
IP Rating: IP67
Dimmable
UL, CE, and CSA Listed

LUTRON Skylark Contour Dimmer

Part No.: TRIDIMSKY
Width: 2.94 in (75 mm)
Length: 4.69 in (120 mm)
Depth: 0.30 in (7.6 mm)

- Single pole and 3-way versions
- Compatible with Acolyte MLV drivers
- Slide adjusts brightness and On/Off control
- 30 mA max control current
- Available in white finish

LUTRON NOVA-T Dimmer

Part No.: TRIDIMNOVA
Width: 2.75 in (70 mm)
Length: 4.56 in (116 mm)
Depth: 0.30 in (7.6 mm)

- Slide adjusts brightness and On/Off control
- 30 mA max control current
- Available in white finish

LUTRON DIVA Dimmer

Part No.: TRIDIMDIVA
(With Locator Light) TRIDIMDIVAL
Width: 2.94 in (75 mm)
Length: 4.69 in (120 mm)
Depth: 0.30 in (7.6 mm)

- Large paddle switch with a captive linear-slide dimmer
- 30 mA max control current
- Available in white finish
- Available with locator light which glows green when the switch is off

Note: For more options, please reference the Optional Dimmer List on Acolyte product website page.

AVAILABLE DRIVERS / CONTROLLERS AND DIMMING OPTIONS / WIRE GAUGE CHART

0-10V DRIVERS AND DIMMERS

0-10V Dimmable Waterproof Drivers

96W Part No.: DRVW249610P
288W Part No.: DRVW2428810P
Output Voltage: 24 V (+/- 0.5V)
Voltage Range: 100-277 VAC
Environmental Rating: UL Wet Location
UL Listed

LUTRON DIVA Dimmer

Part No.: LVDIMDIVA
Width: 2.94 in (75 mm)
Length: 4.69 in (120 mm)
Depth: 0.30 in (7.6 mm)

- Compatible with 0-10 V Dimming Module
- Large paddle switch with a captive linear-slide dimmer
- 30 mA max control current
- Available in white finish

LUTRON NOVA-T Dimmer

Part No.: LVDIMNOVA
Width: 2.75 in (70 mm)
Length: 4.56 in (116 mm)
Depth: 0.30 in (7.6 mm)

- Compatible with 0-10 V Dimming Module
- Slide adjusts brightness and On/Off control
- 30 mA max control current
- Available in white finish

0-10V Dimmable 90W VW/WD Driver

Part No.: DRVRFWDVW2490120
- 0-10V Constant Voltage driver
- Compatible with 0-10V dimming systems
- Use for Variable White, Warm Dim or Static White
- No minimum load requirement
- Driver can be loaded to maximum wattage
- Meets CEC Title 24 Section JA8 flicker requirements
- Superior flicker-free dimming to 0.1%
- UL Listed Class 2 driver
- Integrated junction box
- Wiring compartments with knockouts for safety

DMX CONTROLLER AND PART NUMBER - FOR COLOR CHANGING VERSIONS

GLASS TOUCH WALL CONTROLLERS
Part Number: AWCRGBWWBK
AWCVWBK

1 ZONE WALL CONTROLLER
Part Number: DMXCTRLG

5 ZONE WALL CONTROLLER
Part Number: DMXCTRL

10 ZONE WALL CONTROLLER
Part Number: DMXCTRLD

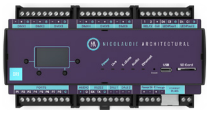

2 UNIVERSE DMX CONTROLLER
Part Number: DMXCTRLDR2U

6 UNIVERSE DMX CONTROLLER
Part Number: DMXCTRLDR6U

4 CHANNEL WATERPROOF DMX INTERFACE
Part Number: DMXINFWLCD4

5 CHANNEL DMX INTERFACE
Part Number: DMXINFLCD5

DMX OPTO SPLITTER
Part Number: DMXOS8

DRIVER AND RIBBONLYTE AT FULL LOAD

Wattages	30		60		96		150		200		240		300		320	
Wire Gauge	Feet	Meters	Feet	Meters	Feet	Meters	Feet	Meters	Feet	Meters	Feet	Meters	Feet	Meters	Feet	Meters
24 AWG	14	4.27	9	2.74	5.5	1.68	3.75	1.14	2.75	0.84	2.25	0.69	1.75	0.53	1.75	0.53
22 AWG	22	6.71	14	4.27	9	2.74	5.75	1.75	4.5	1.37	3.5	1.07	2.75	0.84	2.75	0.84
20 AWG	35	10.67	23	7.01	14	4.27	9	2.74	7	2.13	5.75	1.75	4.5	1.37	4.25	1.30
18 AWG	56	17.07	37	11.28	23	7.01	15	4.57	11	3.35	9	2.74	7.5	2.29	7	2.13
16 AWG	90	27.44	60	18.29	37	11.28	24	7.32	18	5.49	15	4.57	12	3.66	11	3.35
14 AWG	142	43.29	95	28.96	59	17.99	38	11.59	28	8.54	23	7.01	19	5.79	17	5.18
12 AWG	226	68.90	151	46.04	94	28.66	60	18.29	45	13.72	37	11.28	30	9.15	28	8.54
10 AWG	360	109.76	240	73.17	150	45.73	96	29.27	72	21.95	60	18.29	48	14.63	45	13.72
8 AWG	574	175.00	381	116.16	239	72.87	153	46.65	115	35.06	95	28.96	76	23.17	71	21.65

WIRING DIAGRAMS

0-10V

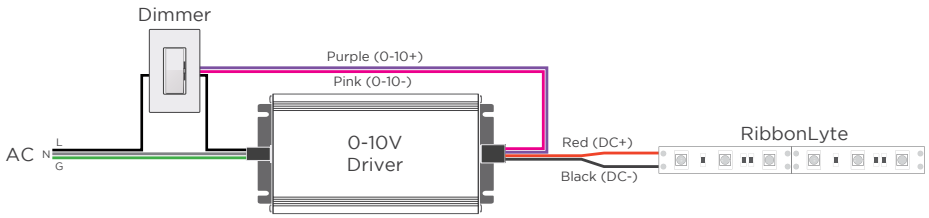

MLV / ELV

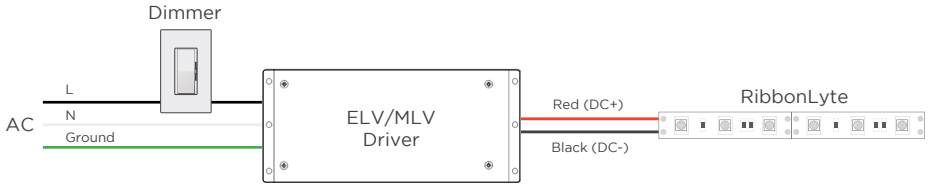

DMX

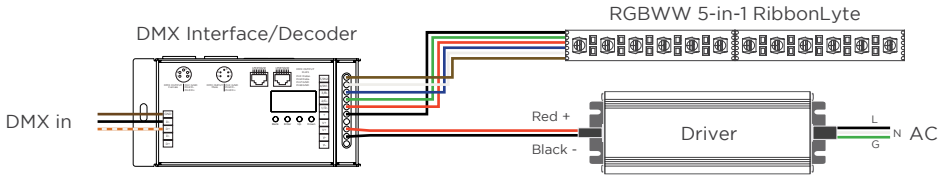

WARM DIM

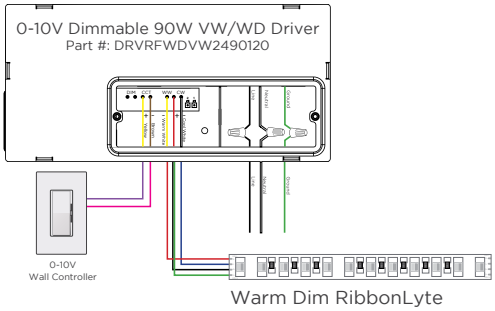

2-CHANNEL VARIABLE WHITE DIMMING

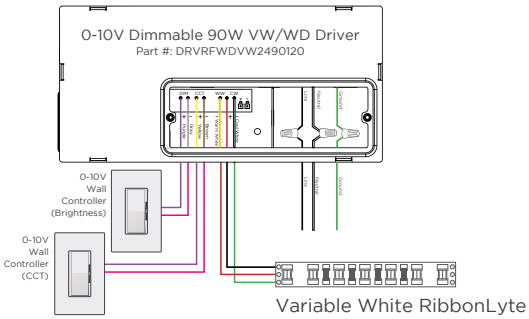

DMX WIRING DIAGRAM - COMPATIBLE WITH ALL MODELS OF VARIABLE WHITE RIBBONLYTE

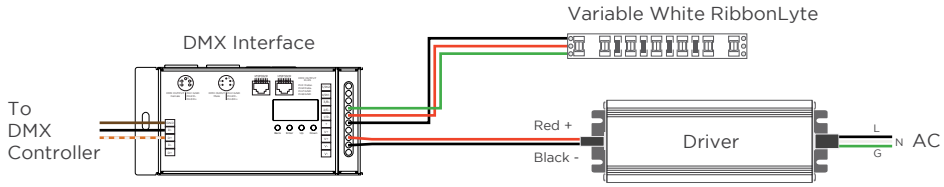

WIRE COLORS PER RIBBONLYTE COLOR

STATIC WHITE + STATIC COLOR
Red Wire (+) Positive
Black Wire (-) Negative

RGBW + RGBA
Black Wire (+) Positive
Red Wire (-) goes to Red Channel
Green Wire (-) goes to Green Channel
Blue Wire (-) goes to Blue Channel
White Wire (-) goes to White Channel

RGBWW
Black (+) Positive
Green Wire (-) goes to Green Channel
Red Wire (-) goes to Red Channel
Blue Wire (-) goes to Blue Channel
White Wire (-) goes to White Channel 1
Brown Wire (-) goes to White Channel 2

WARM DIM
Red Wire (-) goes to Warm White Channel
Blue Wire (-) goes to Cool White Channel
Black Wire (+) goes to Warm White Channel
Green Wire (+) goes to Cool White Channel

VARIABLE WHITE
Black Wire (+) Positive
Red Wire (-) goes to Warm White Channel
Green Wire (-) goes to Cool White Channel

REV.01JUN2023