GEN LED acolyte® Architectural Lighting Solutions

Date | Project

Notes

## NEON SILHOUETTE

It's like neon, but better! This bendable, waterproof silicone fixture uses a smooth, flat lens that gives modern LEDs the classic glow of pinpoint neon lines. Available in static white, static colors, variable white and RGB options, our Neon Silhouette is designed to brave the elements in façade lighting and lettering.

- Flexible silicone LED tube creates vivid colors and bold statements
- Waterproof and UV resistant
- Sleek, flat design helps create elegant lighting solutions
- 110° beam angle
- Assembled in U.S.

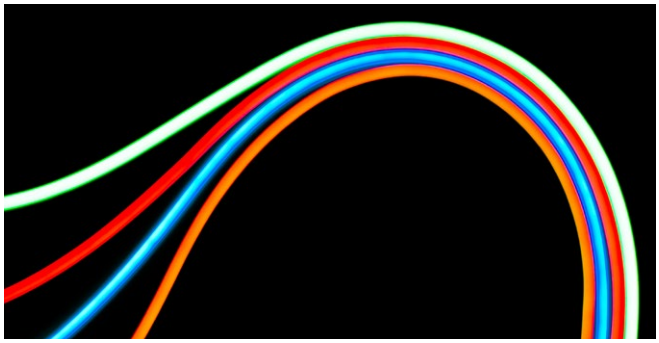

### Applications:

| | | |
|---|---|---|
| Commercial | Hospitality | Residential |
| Entertainment | Museums | Retail / Signage |
| Healthcare | Public Spaces | |

UL CE RoHS REACH IP67

## ORDERING GUIDE

| Category | Wattage & Color | | Power Feed Direction |
|---|---|---|---|
| **NLS** | | | |
| **NLS** - Neon Silhouette | **3.024** - 3.0 W/ft 2400K | **3.0R*** - 3.0 W/ft Red | **E** - End Feed |
| | **3.027** - 3.0 W/ft 2700K | **3.0G*** - 3.0 W/ft Green | **S** - Side Feed |
| | **3.030** - 3.0 W/ft 3000K | **3.0B*** - 3.0 W/ft Blue | **B** - Bottom Feed |
| | **3.035** - 3.0 W/ft 3500K | **3.0A*** - 3.0 W/ft Amber | |
| | **3.040** - 3.0 W/ft 4000K | **3.0P*** - 3.0 W/ft Pink | |
| | **3.050*** - 3.0 W/ft 5000K | **3.0RGB** - 3.0 W/ft Red, Green, Blue | |
| | **3.060*** - 3.0 W/ft 6000K | **3.0VW** - 3.0 W/ft Variable White | |
| | * Special orders only | | |

**Mounting**

**1. Aluminum Mounting Clip**
Part #: NLSMOUNTCLIPV2

**2. Neon Silhouette Mounting Channel**
Sold by the foot, up to 6 ft 6 in. / 2 m
Part #: NLSCHV2

## AVAILABLE COLORS AND COLOR TEMPERATURES

2400K 2700K 3000K 3500K 4000K 5000K* 6000K*

Red* Amber* Green* Blue* Pink* VW RGB

* Special orders only

## POWER FEED OPTIONS / SPECIFICATIONS / USAGE GUIDELINES

| SPECIFICATIONS | NEON SILHOUETTE |
|---|---|
| Operating Voltage | Static White & Static Color: Constant Current 24V DC<br>Variable White & RGB: Constant Voltage 24V DC |
| Power Consumption | Static White, Static Colors, Variable White, RGB: 3.0 W/ft (9.8 W/m) |
| Protection Rating | IP67 |
| Beam Angle | 110° |
| Dimming | ELV / MLV / 0-10 Volt / DMX / Lutron Hi-Lume 1% dimming LED drivers |
| Operating Temperature | -13° F to 113° F (-25° C to 45° C) |
| Color Temperatures / Colors | 2400K, 2700K, 3000K, 3500K, 4000K, 5000K*, 6000K*, Red*, Green*, Blue*, Amber*, Pink*, Variable White (2700K-5400K), RGB |
| Lamp Life | 50,000 Hours |
| Max Length | Static White: 26 ft 3 in. (8 m)<br>Red: 55 ft 9.3 in. (17 m) / Green, Blue, Pink: 42 ft 7.8 in. (13 m) / Amber: 55 ft 9.3 in. (17 m)<br>Variable White & RGB: 16 ft 4.9 in. (5 m) |
| Cuttable Length | 1.97 in. (50 mm) |
| Power Cable Length | Standard: 12 in. (304.8 mm) / Custom: up to 20 ft (6 m) |
| UV Resistant | UV tested in accordance with ISO 4892-3 with no visible change on the appearance of the sample |
| Minimum Bend Diameter | 4.72 in (120 mm) Not Field Cuttable |
| CRI (white) | 90+ for all Color Temperatures |
| Lumens | **3.0 Static White**<br>3500K: 116 lm/ft (380.5 lm/m), 39 lm/W |
| | **3.0 Static Color**<br>Red: 49 lm/ft (160.7 lm/m), 16 lm/W<br>Green: 121 lm/ft (396.9 lm/m), 40 lm/W<br>Blue: 15 lm/ft (49.2 lm/m), 5 lm/W<br>Amber: 38 lm/ft (124.6 lm/m), 13 lm/W<br>Pink: 44 lm/ft (144.3 lm/m), 15 lm/W |
| | **3.0 Variable White**<br>101 lm/ft (331.3 lm/m), 34 lm/W |
| | **3.0 RGB**<br>Red: 11 lm/ft (36.1 lm/m), 11 lm/W<br>Green: 29 lm/ft (95.1 lm/m), 29 lm/W<br>Blue: 5 lm/ft (16.4 lm/m), 5 lm/W<br>All LEDs at 100%: 45 lm/ft (147.6 lm/m), 15 lm/W |

* Special orders only

### POWER FEED OPTIONS

**End Feed** - Power From End

**Side Feed** - Power From Side

**Bottom Feed** - Power From Bottom

## USAGE GUIDELINES

- When installing this product take into account the surface temperature of the material this product is mounted to. Many building surfaces which are exposed to direct sunlight exceed the 113° F/45° C maximum that our product is rated for. High risk locations like this should be avoided.
- This product is not intended to be submerged in pools and fountains and does not carry UL 676 certification to do so. Available for download at: www.GENLEDBrands.com/Acolyte
- Compatible with a wide variety of control products including the entire line of Lutron dimming systems.
- For use with Acolyte drivers, triac dimming modules, and 0-10 modules.
- Use with non-Acolyte triac, MLV or ELV drivers is not supported or warrantied
- Due to the cuttable points inside, this product's cuttable lengths are generally longer or shorter than the customer requested length. Unless specified, this product is factory cut at the shorter cuttable point
- This product can be used in wet, outdoor locations around swimming pools and spa tubs, but not submerged in swimming pools and spa tubs.
- We reserve the right to make changes to product lineup, specifications, design and finishes at any time without notice.

Acolyte does not warrant or represent that the information is free from errors or omission. The information may change without notice and Acolyte is not in any way liable for the accuracy of any information printed and stored or in any way interpreted or used.

## DIMENSIONS / DIAGRAMS

| DIMENSIONS | | NEON SILHOUETTE |
|---|---|---|
| | | 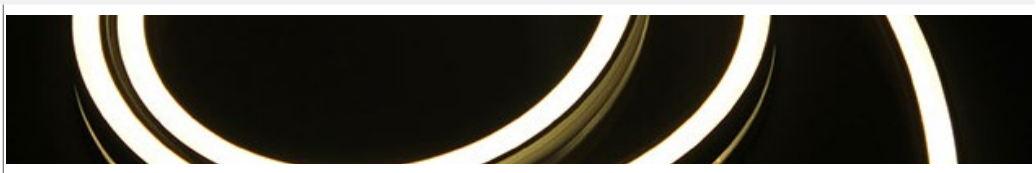 |
| FLEX CHANNEL | | |
| IP68 | Assembled Width | 0.33 in / 8.5 mm |
| | Length | Varies (see dimmensions on pg. 2) |

| DIAGRAMS | | NEON SILHOUETTE |
|---|---|---|
| TUBE | 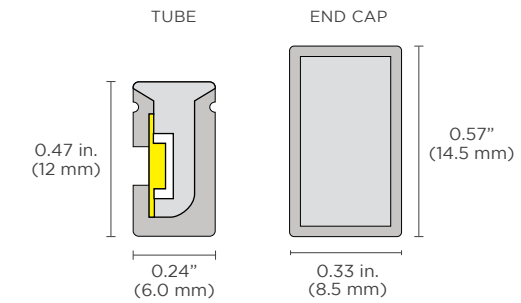  | **TUBE OUTER HEIGHT:** 0.47 in / 12 mm<br>**TUBE OUTER WIDTH:** 0.24 / 6.0 mm<br><br>**END CAP HEIGHT:** 0.57 in / 14.5 mm<br>**END CAP WIDTH:** 0.33 in / 8.5 mm |
| MOUNTING CLIP | 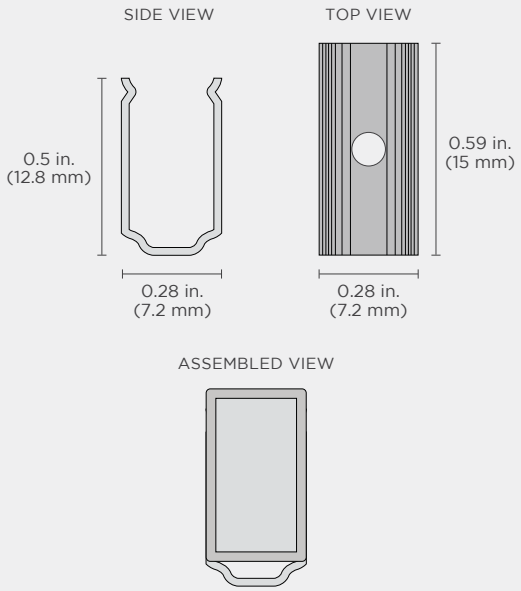  | **MOUNTING CLIP OVERALL HEIGHT:** 0.5 in / 12.8 mm<br>**MOUNTING CLIP LENGTH:** 0.59 in / 15 mm<br>**MOUNTING CLIP WIDTH:** 0.28 in / 7.2 mm<br>**MOUNTING CLIP SCREW TOP DIAMETER:** 0.1 in / 2.5 mm<br>**MOUNTING CLIP THICKNESS:** 0.05 in / 1.3 mm<br>**MOUNTING CHANNEL:** Sold by the foot, up to 6 ft 6 in. / 2 m (Part #: NLSCHV2)<br><br>Use (1) mounting clip per foot unless specific shapes require more<br>*Recommended mounting clip screw size: #4-40 |

### DISCLAIMER

**When installing this product take into account the surface temperature of the material this product is mounted to. Many building surfaces which are exposed to direct sunlight exceed the 113° F/45° C maximum that our product is rated for. High-risk locations like this should be avoided.**

**This product is not intended to be submerged in pools and fountains and does not carry UL 676 certification to do so.**

## WIRING DIAGRAMS

### 0-10V

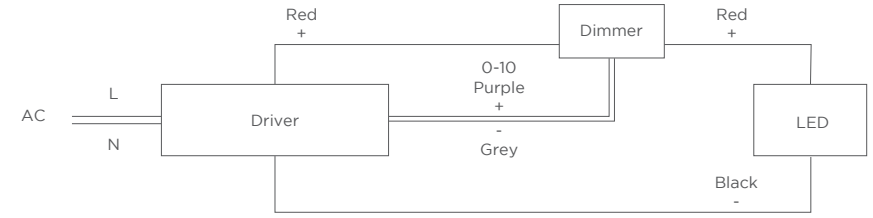


### MAGNETIC + ELV

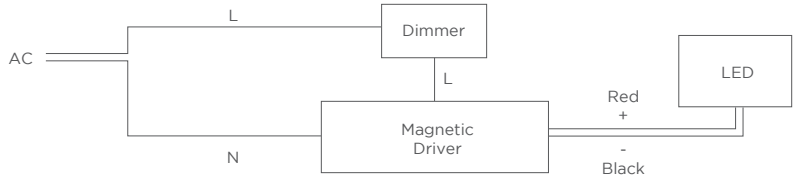


### DMX

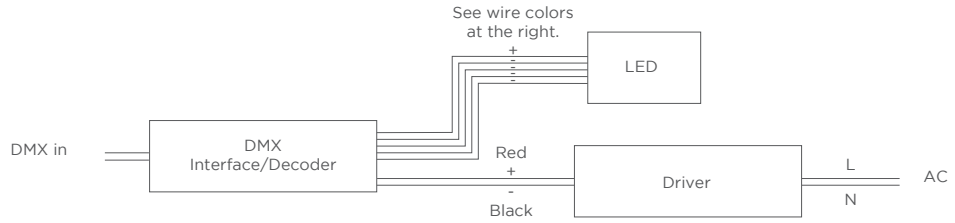


### WARM DIM

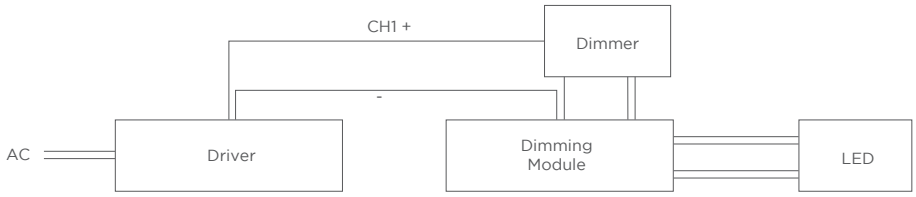


### 2-CHANNEL VARIABLE WHITE DIMMING

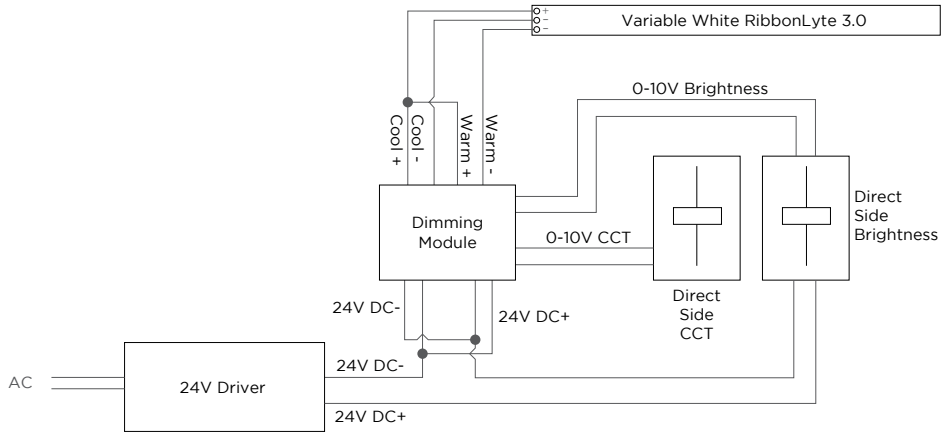


REV.14JUN2022

### WIRE COLORS PER RIBBONLYTE COLOR

**STATIC WHITE + STATIC COLOR**
Red Wire (+) Positive
Black Wire (-) Negative

**RGB**
Black Wire (+) Positive
Red Wire (-) Goes To Red Channel
Green Wire (-) Goes To Green Channel
Blue Wire (-) Goes To Blue Channel

**VARIABLE WHITE**
Black Wire (+) Positive
Red Wire (-) goes to Warm White Channel
Green Wire (-) goes to Cool White Channel

**WARM DIM**
Red Wire (-) goes to Warm White Channel
Blue Wire (-) goes to Cool White Channel
Black Wire (+) goes to Warm White Channel
Green Wire (+) goes to Cool White Channel