GEN LED acolyte® Architectural Lighting Solutions

Date | Project

Notes

PXLNET TRANSCEIVER

Simplify lighting installation infrastructures and increase system efficiency with PxLNet Transceivers. Extend the range of a single pixel controller port with two PxLNet Transceiver modules – one in transmit mode and one in receive mode. Send or receive SPI signals up to 8 universes as far as 820 ft (250 m). Send or receive DMX signals as far as 1640 ft (500 m).

- Operating voltage range of 5-48 VDC
- Connect up to 8 universes
- 4 connection options (RJ45 bus to screw terminals, solder pads, screw terminals or RJ45 bus)
- Transmit and receive mode
- SPI or DMX conversion
- SPI signal range up to 820 ft (250 m)
- DMX signal range up to 1640 ft (500 m)

CE RoHS

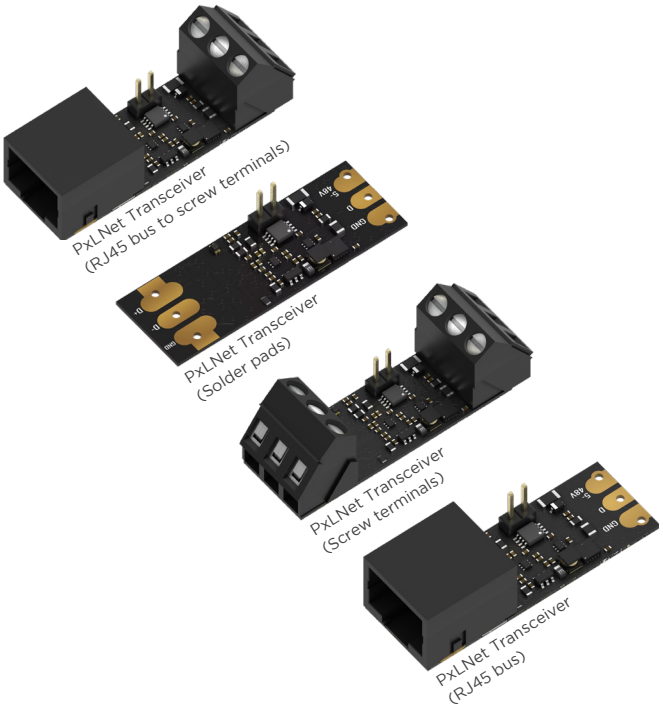

ORDERING GUIDE

Part Number	
CTRLPIXELTRRJST -	PxLNet Transceiver (RJ45 bus to screw terminals)
CTRLPIXELTRSP -	PxLNet Transceiver (Solder pads)
CTRLPIXELTRST -	PxLNet Transceiver (Screw terminals)
CTRLPIXELTRRJ -	PxLNet Transceiver (RJ45 bus)

SPECIFICATIONS

Input Power	5-48 VDC		
Power Consumption	1 W		
IP Rating	IP00		
DC Input	Overvoltage protection (max. 48 VDC)		
Control	DMX, SPI		
Number of Channels	8 universes		
Connection Options	RJ45 bus to screw terminals, solder pads, screw terminals, RJ45 bus		
Wire Sizes	**Solder pad wiring** 3-5 mm² | 20-24 AWG	**Terminal wiring power** Max. 2.5 mm² | 14 AWG	**Terminal wiring data** Recommended: 3-5 mm² | 20-24 AWG
Environment	Indoor use		
Operating Temperature	-4 — 113 °F (-20 — 45 °C)		
Standards	CE, RoHS		
Dimensions (L x W x H)	1.71 x 0.59 x 0.55 in. (43.5 x 15 x 14 mm)		
Weight	0.013 lb (6 g)		
Warranty	2 years		

Acolyte does not warrant or represent that the information is free from errors or omission. The information may change without notice and Acolyte is not in any way liable for the accuracy of any information printed and stored or in any way interpreted or used.

DIMENSIONS

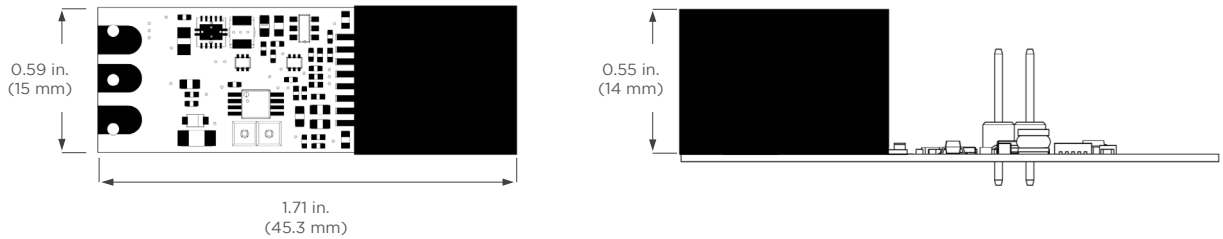

DIAGRAMS

Top **Bottom**

1. Power (VCC / DC + / 5-24 V)
2. BUS I/O (Data Out/In)
3. Power (GND / DC -)
4. RJ45 BUS (Data Input)
5. Jumper (Tx / Rx mode)
6. White LED Power Indicator
7. Blue LED Power Indicator

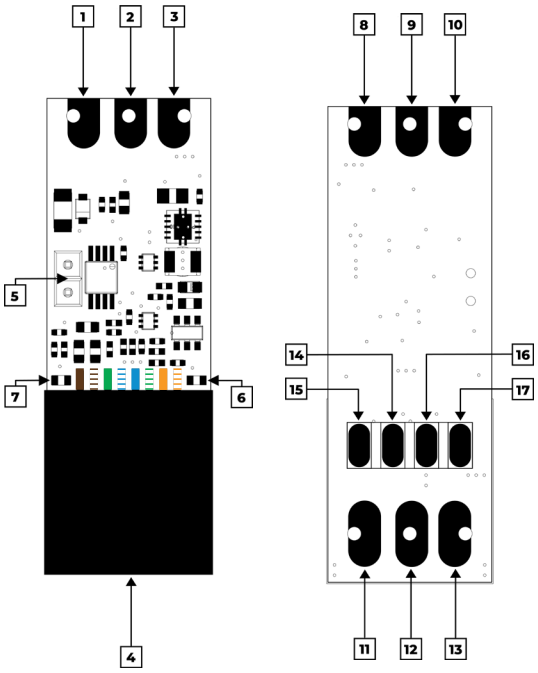

8. GND / DC -
9. Data OUT / IN
10. VCC / DC + / 5-24 V
11. PxLNet Data IN / OUT +
12. PxLNet Data IN / OUT -
13. PxLNet GND

Pin 1: PxLNet Data + In
Pin 2: PxLNet Data - In
Pin 3: --
Pin 4: --
Pin 5: --
Pin 6: --
Pin 7: PxLNet GND
Pin 8: PxLNet GND / DC -

OPERATING MODES

Receiver mode (Rx)

The default operating mode of the PxLNet Transceiver is Receive mode (Rx).

Please make sure that the Rx/Tx jumper [5] is installed.

The PxLNet data is received, converted to the original protocol and outputted on the Data out side.

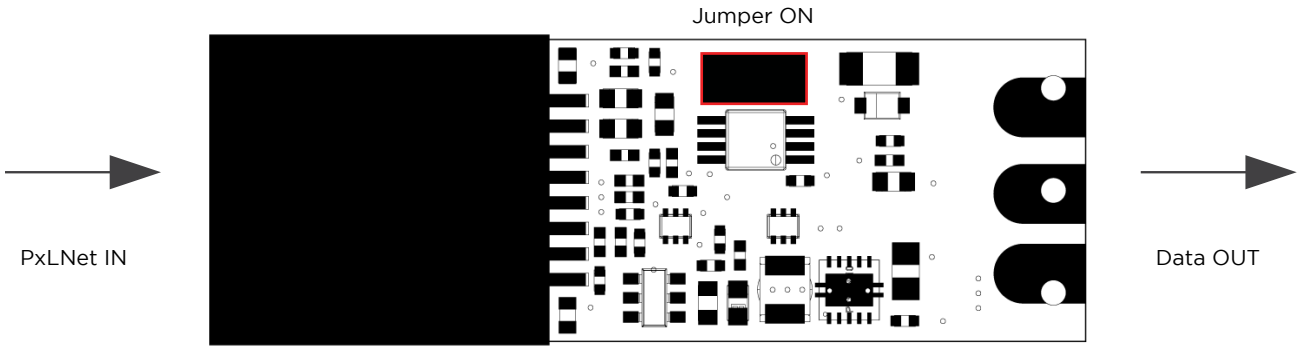

Transmitter (Tx)

In order to use the PxLNet Transceiver as a single channel transmitter, connect the D (solder pad [2] or [9] as indicated on page 5) to the incoming SPI Data signal.

Remove the Tx/Rx jumper [5] as indicated, to activate transmit (Tx) mode.

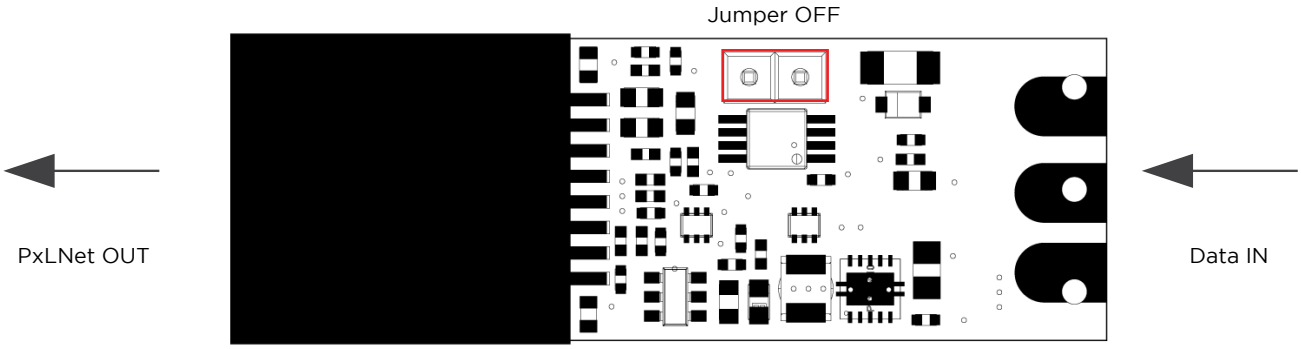

Connect a network cable to the RJ45 bus and connect it to the next PxLNet Transceiver in receivingmode (Rx).

Instead of connecting a network cable to the RJ45 bus, a cable can also be soldered to solder pads [11][12][13] on the underside (as indicated on page 5).

The distance between two PxLNet Transmitters is max. 250 meters (820 ft).

CONVERT PXLNET TO SPI DATA SOLDERED DIRECTLY

DiGidot C4 with PxLNet Transmitter connected by Cat-5E network cables to PxLNet Transceivers which are soldered directly to a pixel controlled LED strip. Please double check if the solder pads of the LED strip align correctly and are in te correct order of the PxLNet Transceiver solder pads. If not please follow wiring scheme 2.

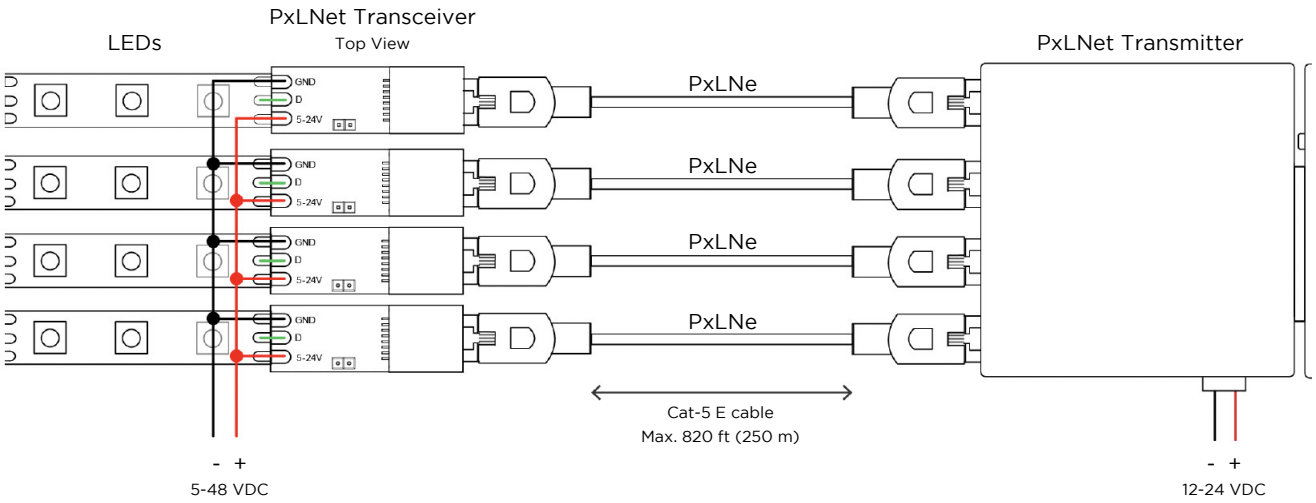

SUPPLY POWER AT ALTERNATIVE LOCATION

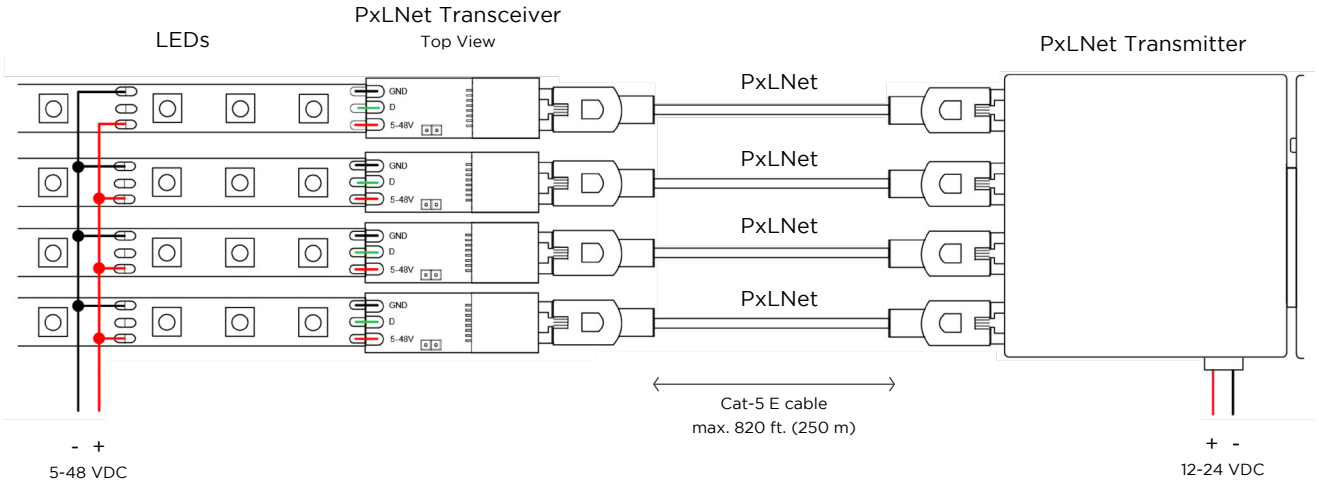

CONVERT TO SPI AND WIRED LUMINAIRE CONNECTION

DiGidot C4 with PxLNet Transmitter connected by Cat-5E network cables which are soldered to PxLNet Transceivers which are soldered directly to a pixel controlled LED product.

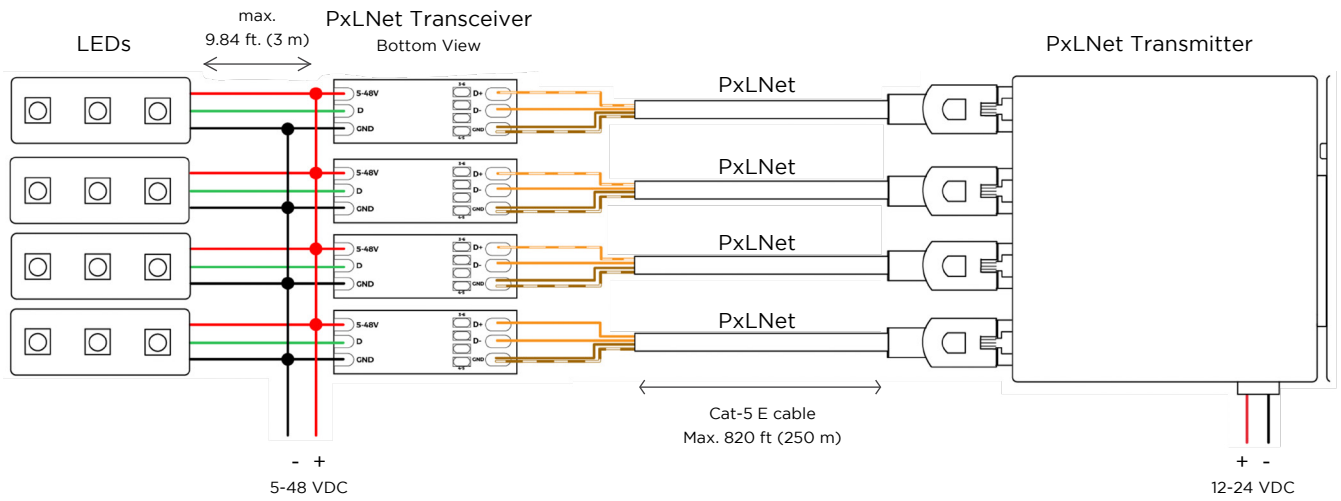

DIFFERENT OPERATING VOLTAGES

DiGidot C4 with PxLNet Transmitter connected by Cat-5E network cables which are connected to PxLNet Transceivers, which are wired to pixel controlled LED products, that run on another power supply and/or voltage.

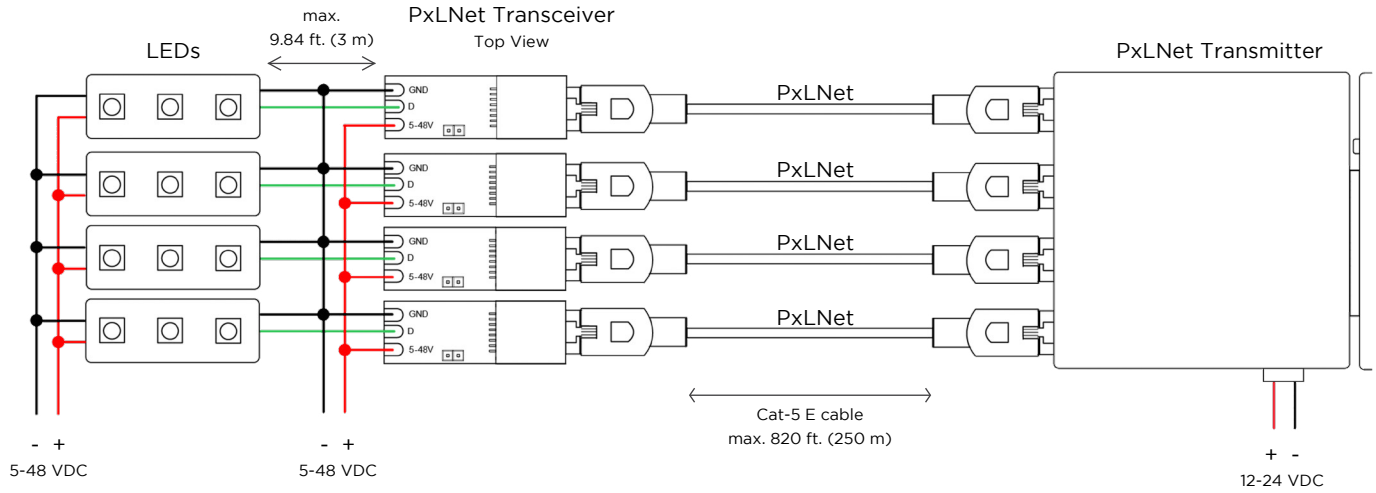

TRANSCEIVER IN TRANSMIT MODE

DiGidot C4 with PxLNet Transmitter connected by Cat-5E network cables to PxLNet Transceivers which are soldered directly to a pixel controlled LED strip. At the end of every LED strip another PxLNet Transceiver is placed in transmit mode, to send the remaining signal to the next LED strip. Please note that the operating mode jumper [5] on the top side must be removed to change it to transmit (Tx) mode.

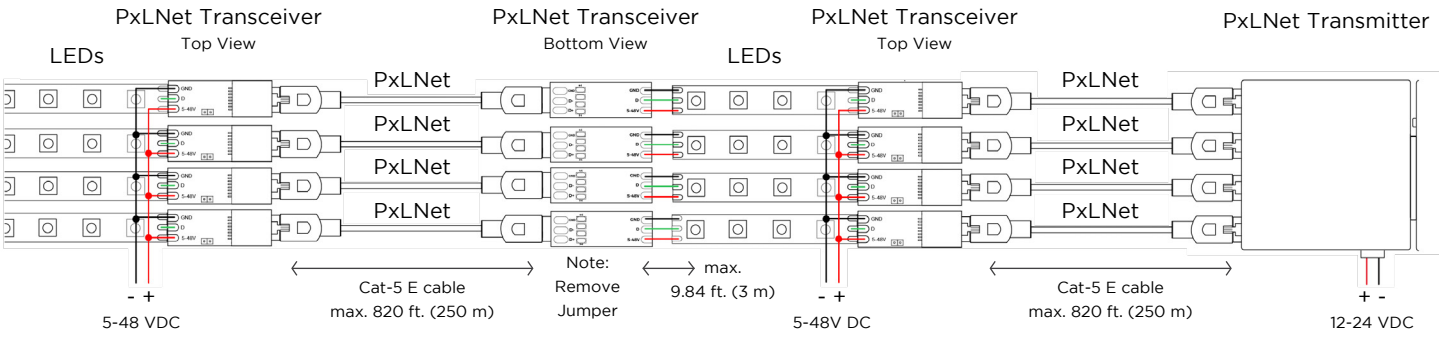

SINGLE PORT SPI RANGE EXTENSION

DiGidot C4 Data port connected directly to a PxLNet Transceiver in transmit mode, to send the PxLNet signal up to 250 meters away to the next PxLNet Transceiver. Please note that the operating mode jumper on the top side must be removed to change it to transmit (Tx) mode.

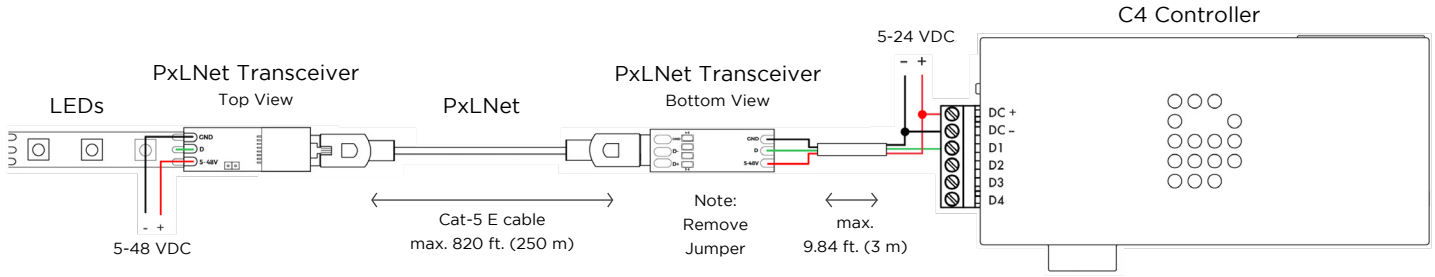

CONVERT PXLNET TO SPI DATA + CLOCK

PxLNet Transceivers can also be used to convert two PxLNet data lines to Data + Clock SPI signals. For this option a dual Transceiver setup is required.

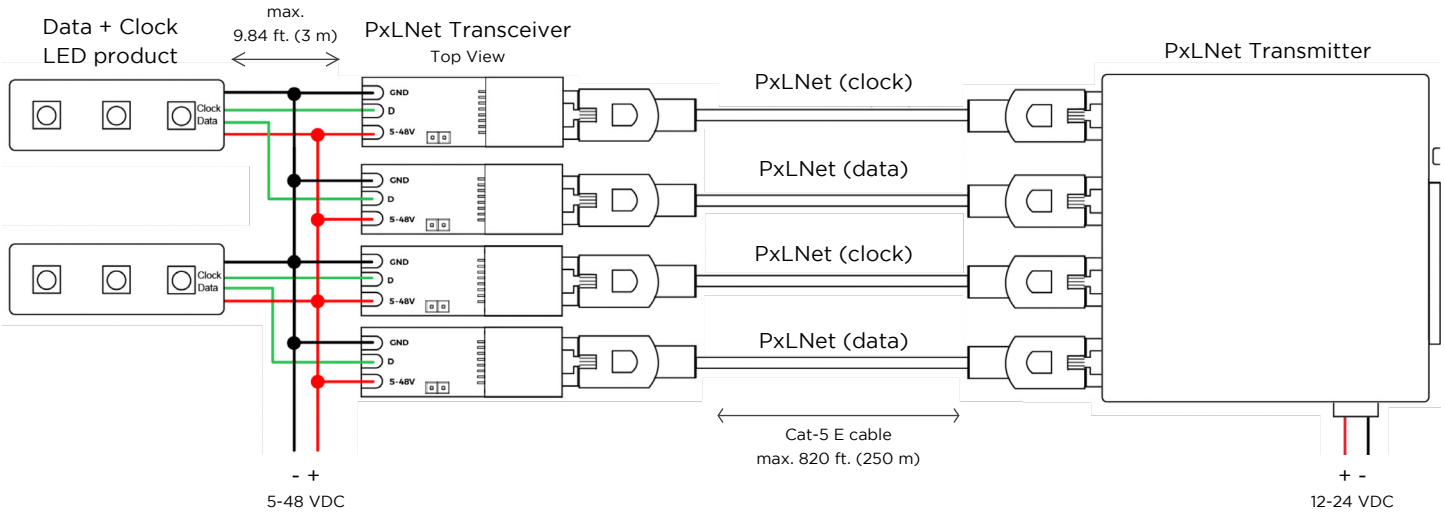

COMBINE SHORT & LONG RANGE DATA + CLOCK SPI

DiGidot C4 with PxLNet Transmitter connected by Cat-5E network cables to PxLNet Transceivers which are soldered directly to a pixel controlled LED strip which is powered from an alternative section.

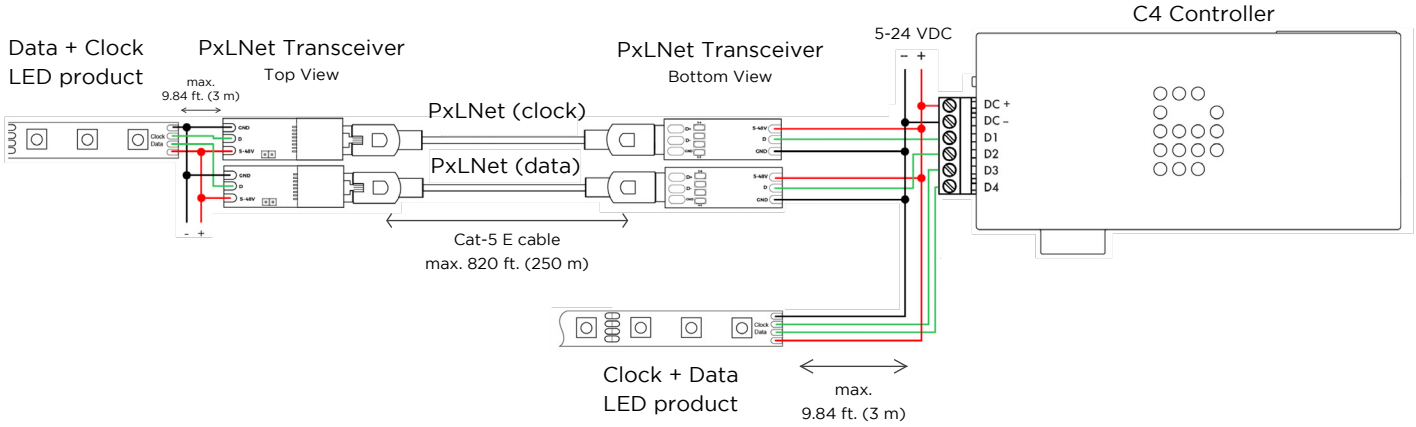

EXTENDING DMX TTL SIGNALS

DiGidot C4 with PxLNet Transmitter, connected by Cat-5E network cables to PxLNet Transceivers. Please note that DMX TTL must be configured on the DiGidot C4 In/out configuration page. Configure all ports to DMX TTL in the DiGidot C4 In/out configuration.

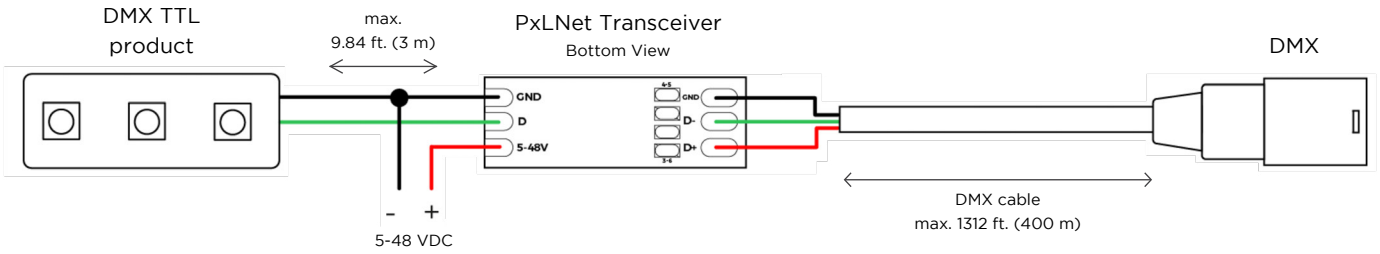

CONVERTING DMX TO DMX TTL
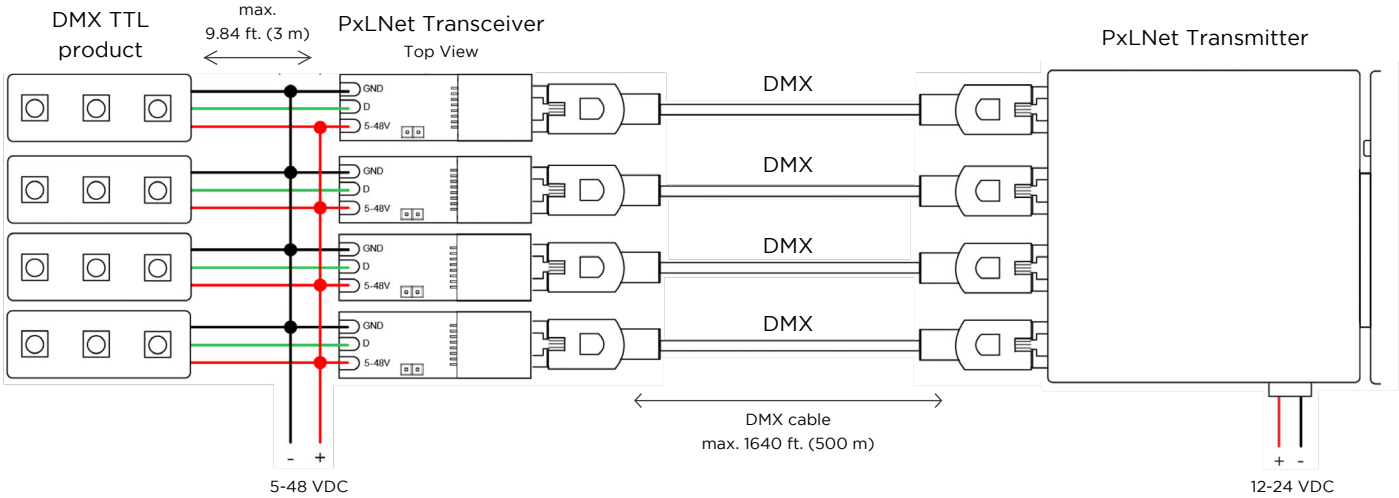
Using an external DMX signal, connected to a PxLNet Transceiver which is connected to a DMX TTL controlled LED product. The DMX signal can be soldered, as indicated in the drawing or can be inserted in the RJ45 bus on the top side (DMX pinout according to USITT standard, see page 5)